MOUNTING AND OPERATING INSTRUCTIONS

EB 5573 EN

Translation of original instructions

TROVIS 5573 Heating and District Heating Controller

Firmware version 3.05.xx

CE EAC

Edition October 2024

Note on these mounting and operating instructions

These mounting and operating instructions assist you in mounting and operating the device safely. The instructions are binding for handling SAMSON devices. The images shown in these instructions are for illustration purposes only. The actual product may vary.

➔ For the safe and proper use of these instructions, read them carefully and keep them for later reference.

➔ If you have any questions about these instructions, contact SAMSON's After-sales Service (aftersalesservice@samsongroup.com).

Documents relating to the device, such as the mounting and operating instructions, are available on our website at ***www.samsongroup.com > Downloads > Documentation***.

Note

These Mounting and Operating Instructions EB 5573 are valid for firmware versions 3.05.00 to 3.05.99. The most recent version of EB 5573 is available at www.samsongroup.com.

Definition of signal words

DANGER

Hazardous situations which, if not avoided, will result in death or serious injury

WARNING

Hazardous situations which, if not avoided, could result in death or serious injury

Experimental function

New function made available before it becomes a standard function in the controller firmware.

NOTICE

Property damage message or malfunction

Note

Additional information

Tip

Recommended action

1 Safety instructions and measures 1-1
1.1 Notes on possible severe personal injury 1-3
1.2 Notes on possible property damage 1-4
2 Markings on the device 2-1
2.1 Nameplate 2-1
2.2 Firmware versions 2-2
3 Design and principle of operation 3-1
3.1 Configuration using TROVIS-VIEW 3-1
3.2 Connection to SAM DISTRICT ENERGY 3-2
3.3 Technical data 3-3
3.4 Dimensions 3-4
3.5 Values for resistance thermometers 3-5
4 Shipment and on-site transport 4-1
4.1 Accepting the delivered goods 4-1
4.2 Removing the packaging from the controller 4-1
4.3 Transporting the heating controller 4-1
4.4 Storing the controller 4-1
5 Installation 5-1
5.1 Installation conditions 5-1
5.2 Preparation for installation 5-1
5.3 Mounting the controller 5-1
5.4 Electrical connection 5-3
6 Operation 6-1
6.1 Operating controls 6-1
6.2 Optional interfaces 6-2
7 Start-up and configuration 7-1
7.1 Setting the system code number 7-2
7.2 Activating and deactivating functions 7-3
7.3 Changing parameters 7-5
7.4 Calibrating sensors 7-6
7.5 Entering customized key number 7-8
8 Setup 8-1
8.1 Selecting the operating mode 8-1
8.2 Schedules 8-2
8.2.1 Setting the time and date 8-2
8.2.2 Setting the times-of-use 8-3

8.2.3 Setting the party timer (special time-of-use) 8-5
8.2.4 Programming public holidays (special times-of-use) 8-5
8.2.5 Programming vacation periods (special times-of-use) 8-7
8.3 Entering day and night set points 8-9
8.4 Reset to default settings 8-10
8.5 Reading information 8-10
8.6 Operating the controller in manual mode 8-11
9 Malfunctions 9-1
9.1 Error list 9-1
9.2 Sensor failure 9-2
9.3 Temperature monitoring 9-2
9.4 Error status register 9-3
10 Servicing 10-1
10.1 Recommended inspection and testing 10-1
10.2 Firmware update 10-2
10.2.1 Update over RS-232 interface 10-2
10.2.2 Update over RS-485 bus 10-4
10.2.3 Update over Ethernet 10-5
10.2.4 Automatic firmware update for several controllers over RS-485 bus or Ethernet 10-7
11 Decommissioning 11-1
12 Removal 12-1
13 Repairs 13-1
13.1 Returning devices to SAMSON 13-1
14 Disposal 14-1
15 Certificates 15-1
16 Appendix A (configuration instructions) 16-1
16.1 Systems 16-1
16.2 Functions of the heating circuit 16-35
16.2.1 Outdoor-temperature-compensated control 16-35
16.2.1.1 Outdoor temperature received or sent as 0 to 10 V signal 16-36
16.2.1.2 Gradient characteristic 16-37
16.2.1.3 Four-point characteristic 16-39
16.2.2 Fixed set point control 16-40
16.2.3 Underfloor heating/drying of jointless floors 16-41
16.2.4 Night set-back 16-42

16.2.4.1 OT activation value in rated operation 16-42
16.2.4.2 OT deactivation value in rated operation 16-43
16.2.4.3 OT deactivation value in reduced operation 16-43
16.2.4.4 Variable night set-back 16-43
16.2.5 Buffer tank systems Anl 16.x 16-44
16.2.6 Summer mode 16-46
16.2.7 Delayed outdoor temperature adaptation 16-47
16.2.8 Remote operation 16-48
16.2.9 Optimization 16-48
16.2.10 Flash adaptation 16-49
16.2.11 Flash adaptation without outdoor sensor (based on room temperature) 16-50
16.2.12 Adaptation 16-51
16.2.13 Cooling control 16-51
16.2.14 Differential temperature control 16-53
16.3 Functions of the DHW circuit 16-54
16.3.1 DHW heating in the storage tank system 16-54
16.3.1.1 DHW circuit additionally controlled by a globe valve 16-56
16.3.2 DHW heating in the storage tank charging system 16-57
16.3.2.1 Cold charging protection 16-59
16.3.3 DHW heating in instantaneous heating system 16-60
16.3.4 Domestic hot water heating with solar system 16-60
16.3.5 Intermediate heating 16-61
16.3.6 Parallel pump operation 16-61
16.3.7 Circulation pump during storage tank charging 16-62
16.3.8 Priority circuit 16-62
16.3.8.1 Reverse control 16-63
16.3.8.2 Set-back operation 16-63
16.3.9 Forced charging of DHW storage tank 16-64
16.3.10 Thermal disinfection of DHW storage tank 16-64
16.4 System-wide functions 16-66
16.4.1 Automatic summer/standard time switchover 16-66
16.4.2 Frost protection 16-66
16.4.3 Forced pump operation 16-67
16.4.4 Return flow temperature limitation 16-67
16.4.5 Condensate accumulation control 16-69
16.4.6 Three-step control 16-69
16.4.7 On/off control 16-70
16.4.8 Continuous control in control circuit Rk1 16-70

16.4.9 Releasing a control circuit/controller with binary input 16-71
16.4.10 Speed control of the charging pump 16-71
16.4.11 External demand processing 16-72
16.4.12 External demand using a 0 to 10 V signal 16-74
16.4.13 Creep feed rate limitation with a binary input 16-74
16.4.14 Connecting potentiometers for valve position input 16-75
16.4.15 Locking manual level 16-75
16.4.16 Locking the rotary switch 16-75
16.4.17 Feeder pump operation 16-75
16.4.18 External demand for heat due to insufficient heat supply 16-76
16.5 Communication 16-77
16.5.1 RS-485 communication module 16-77
16.5.2 Memory module/mini module 16-78
16.5.3 Data logging 16-79
16.6 Function block lists 16-80
16.7 Parameter lists 16-93
16.8 Customer-specific data 16-103
16.9 Abbreviations 16-111
17 Appendix B 17-1
17.1 Accessories 17-1
17.2 After-sales service 17-2

1 Safety instructions and measures

Intended use

The TROVIS 5573 Heating and District Heating Controller is used to control up to two control circuits:

– Control of a primary heat exchanger or boiler with one mixing heating circuit and one non-mixing heating circuit (both outdoor-temperature-compensated) and control of DHW heating in the secondary circuit
– Outdoor-temperature-compensated buffer storage tank control with solid fuel boiler and solar circuit control
– Control of one outdoor-temperature-compensated heating circuit and a DHW heating with two valves in the primary circuit
– Control of two outdoor-temperature-compensated heating circuits with two valves in the primary circuit

The heating controller is designed to operate under exactly defined conditions. Therefore, operators must ensure that the heating controller is only used in operating conditions that meet the specifications used at the ordering stage. In case operators intend to use the heating and district heating controller in applications or conditions other than those specified, contact SAMSON.

SAMSON does not assume any liability for damage resulting from the failure to use the device for its intended purpose or for damage caused by external forces or any other external factors.

➔ Refer to the technical data for limits and fields of application as well as possible uses.

Reasonably foreseeable misuse

The heating controller is not suitable for the following applications:

– Use outside the limits defined during sizing and by the technical data

Furthermore, the following activities do not comply with the intended use:

– Use of non-original spare parts
– Performing service and repair work not described

Qualifications of operating personnel

The controller must be mounted, started up, serviced and repaired by fully trained and qualified personnel only; the accepted industry codes and practices must be observed. According to these mounting and operating instructions, trained personnel refers to individuals who are able to judge the work they are assigned to and recognize possible hazards due to their specialized training, their knowledge and experience as well as their knowledge of the applicable standards.

Personal protective equipment

No personal protective equipment is required for the direct handling of the controller.

Revisions and other modifications

Revisions, conversions or other modifications of the product are not authorized by SAMSON. They are performed at the user's own risk and may lead to safety hazards, for example. Furthermore, the product may no longer meet the requirements for its intended use.

Warning against residual hazards

The controller has direct influence on controlled components of the heating system (e.g. control valves and pumps). To avoid personal injury or property damage, plant operators and operating personnel must prevent hazards that could be caused in the plant components by the process medium, the operating pressure, the signal pressure or by moving parts by taking appropriate precautions. Plant operators and operating personnel must observe all hazard statements, warnings and caution notes in the referenced documents.

Responsibilities of the operator

Operators are responsible for proper use and compliance with the safety regulations. Operators are obliged to provide these mounting and operating instructions as well as the referenced documents to the operating personnel and to instruct them in proper operation. Furthermore, operators must ensure that operating personnel or third parties are not exposed to any danger.

The plant operator must ensure that the heating and district heating controller is always operated with the latest firmware version.

➔ Update the controller on a regular basis.

➔ Download the currently valid firmware at ***www.samsongroup.com > DOWNLOADS > Software & Drivers > Firmware***.

Responsibilities of operating personnel

Operating personnel must read and understand these mounting and operating instructions as well as the referenced documents and observe the specified hazard statements, warnings and caution notes. Furthermore, operating personnel must be familiar with the applicable health, safety and accident prevention regulations and comply with them.

Referenced standards, directives and regulations

The TROVIS 5573 Heating and District Heating Controller with a CE marking fulfills the requirements of the Directives 2014/30/EU, 2014/35/EU and 2011/65/EU. The declaration of conformity includes information about the applied conformity assessment procedure.

The TROVIS 5573 Heating and District Heating Controller with an EAC marking fulfills the requirements of the Regulations TR CU 004/2011 and TR CU 020/2011.

The 'Certificates' chapter contains this declaration of conformity and TR CU certificate.

The controller is designed for use in low voltage installations.

➔ For wiring, maintenance and repair, observe the relevant safety regulations.

1.1 Notes on possible severe personal injury

⚠ DANGER

Risk of fatal injury due to electric shock.

➔ Before connecting wiring, performing any work on the controller or opening the controller, disconnect the supply voltage and protect it against unintentional reconnection.

➔ Only use power interruption devices that can be protected against unintentional reconnection of the power supply.

➔ Do not remove any covers to perform adjustment work on live parts.

1.2 Notes on possible property damage

NOTICE

Risk of damage to the controller due to the supply voltage exceeding the permissible tolerances.

The controller is designed for use in low voltage installations.

➔ Observe the permissible tolerances of the supply voltage.

Malfunction due to a configuration that does not meet the requirements of the application.

The controller is configured for specific applications by setting functions and parameters. Function and parameter settings have a direct effect on final control elements.

➔ Perform the configuration for the specific application.

Manipulation of the configuration due to unauthorized access.

The controller can be protected against unauthorized access through entering a key number. The key number for first start-up can be found at the back of these mounting and operating instructions.

➔ Do not pass the key number on to unauthorized persons. Keep it in a safe place inaccessible to unauthorized persons.

Risk of controller damage due to large differences in temperature.

➔ Before start-up, wait until the controller has reached the ambient temperature.

System damage caused by frost.

Frost protection is deactivated in the manual mode.

➔ Do not run the heating during cold weather in the manual mode for long periods of time.

2 Markings on the device

2.1 Nameplate

The nameplate shown was up to date at the time of publication of this document. The nameplate on the device may differ from the one shown.

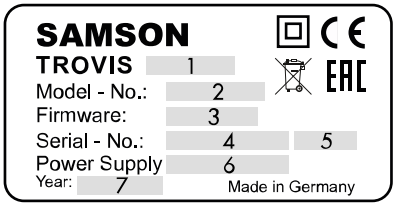

1 Type designation
2 Model number
3 Firmware version
4 Serial number
5 Fuse protection
6 Supply voltage
7 Date of manufacture

2.2 Firmware versions

Firmware revisions	
Old	**New**
1.80	**1.82**
	Internal revisions
1.82	**1.90**
	In the configuration level CO1, the 'Four-point characteristic' function can also be configured for systems Anl 3.x. See CO1 -> F11.
	The demand for the maximum flow set point issued by a 0 to 10 V signal can be made with an adjustable boost. See CO1 -> F18 - 1.
	The controller can be connected to an optional Modbus gateway.
1.90	**1.95**
	The priority operation (reverse control or set-back operation) can be set independently from the time and temperature course of the system (see Appendix A).
	The setting CO1 -> F20 - 1 allows an external demand for heat to be made when insufficient heat is supplied (see Appendix A).
1.95	**2.00**
	The limit switch for creep feed rate limitation can also be connected to input RüF1. In previous versions, it could only be connected to terminals 04/12 (see Appendix A).
2.00	**2.12**
	New hydraulic system Anl 11.6 (see Appendix A)
	New cooling control function (see Appendix A) The cooling control function causes a reversal of the operating direction and a minimum limitation of the return flow temperature in RK1/RK2.
	The demand processing using a 0 to 10 V signal can be applied variably to the 0 to 130 °C transmission range (see Appendix A).
2.12	**2.13**
	The priority operation (**reverse control** and **set-back operation**) can be activated for system Anl 4.5 either for one heating circuit (Rk1 or Rk2) or for both heating circuits (Rk1 and Rk2). See Appendix A.
	New function to **control the speed of the charging pump** based on the charging progress (see Appendix A).
2.13	**2.14**
	Error messages can be issued over binary inputs BI1 and/or BI2 when the binary input is a made or break contact (see Appendix A).

Firmware revisions	
Old	**New**
2.14	**2.20**
	New hydraulic systems Anl 16.x (buffer tank systems). See Appendix A.
	The drying of jointless floors is **not** canceled due to a deviation in the flow temperature (see Appendix A).
2.20	**2.24**
	Internal revisions
2.24	**2.26**
	Function to **receive outdoor temperature as 0 to 10 V signal** extended (CO5 -> F23) Outdoor temperatures can be received or sent using a 0 to 10 V signal.
2.26	**2.28**
	New system Anl 11.5 (see Appendix A)
2.28	**2.30**
	It is possible to connect PTC and Ni1000 sensors (Pt1000 sensors only possible below this firmware version)
2.30	**2.41**
	New functions and parameters for buffer tank systems (see Appendix A) – CO1 -> F22: SLP depending on return flow temperature – CO5' -> F01: AA1 reverse – CO5' > F07: Zero shift New parameters in PA1 parameter level: – Minimum set point to charge buffer tank – Stop charging of the buffer tank – Charging temperature boost – Lag time for storage tank charging pump New parameters in PA4 parameter level: – Maximum buffer tank temperature
	New differential temperature control function (CO1 -> F23) in systems Anl 1.0 and 16.0 (see Appendix A)
	Restrictions when a mini module (order no. 1400-7436) is used (see Appendix A).
2.41	**2.45**
	An active **cold charging protection** function allows the valve position to be determined between 1 and 100 % (default 10 %).
2.45	**2.48**
	Internal revisions

Firmware revisions	
Old	**New**
2.48	**2.51**
	Meaning of CO1, CO2 -> F02 changed F02 - -1 = Outdoor-temperature-controlled control active
	Buffer tank systems: the measured value SF1 is now also relevant to end charging
	Discharging protection for DHW tank and buffer tank
	Separate boost adjustable for underfloor heating circuits
	Heating circuits can be configured to be circuits only processing demand with the settings CO1' -> F00 - 1 and CO2' -> F00 - 1
	Transmission range setting for 0 to 10 V signal to process external demand changed to CO5' -> F07
	Default setting of heating characteristic 1.2 (0.5 for underfloor heating)
	Default setting of the maximum flow temperature: 70 °C
	Delayed outdoor temperature adaptation adjustable in steps of 0.1 °C
2.51	**2.61**
	New function **Variable night set-back** can be configured separately for each heating circuit (setting: CO1', CO2' -> F04 - 1)
	Function blocks CO1' -> F03 and CO4' -> F03 introduced to activate the discharging protection
	Free assignment of analog output: the CO5' -> F10 setting is used to determine which output signal is to be issued at the 0 to 10 V output.
2.61	**2.63**
	New setting configurable: 14 = 3 V supply for analog outputs
2.63	**3.00.xx**
	Harmonization of versions
3.00.xx	**3.05.xx**
	Internal improvements

NOTICE

Mandatory update for digital products and software.

The firmware is being constantly developed further. In some cases, an older firmware version than that described in this chapter may be installed in a heating and district heating controller in the delivered state.

➔ *Update the controller on a regular basis.*

➔ *Download the currently valid firmware at **www.samsongroup.com > DOWNLOADS > Software & Drivers > Firmware** and install it.*

Tip

*The SAMSON NE53 newsletter keeps users up to date on any software or hardware revisions in accordance with NAMUR Recommendation NE 53. You can subscribe to the newsletter at **www.samsongroup.com > SERVICE > NE53 newsletter**.*

3 Design and principle of operation

The TROVIS 5573 Heating and District Heating Controller is used to control up to two control circuits:

– Control of a primary heat exchanger or boiler with one mixing heating circuit and one non-mixing heating circuit (both outdoor-temperature-compensated) and control of DHW heating in the secondary circuit
– Outdoor-temperature-compensated buffer storage tank control with solid fuel boiler and solar circuit control
– Control of one outdoor-temperature-compensated heating circuit and a DHW heating with two valves in the primary circuit
– Control of two outdoor-temperature-compensated heating circuits with two valves in the primary circuit

The TROVIS 5573 Heating and District Heating Controller is adapted to the specific system by setting the appropriate system code number. Additional sensors and/or functions which are not part of the system's basic configuration can be selected over function blocks. The switch positions and entry of the key number allow access to the corresponding levels. For trained staff, the configuration levels used to set function blocks are indicated by "CO" and the parameter levels are indicated by "PA". Data is retrieved and entered at the controller using a rotary pushbutton. This process is facilitated by icons displayed on the LCD.

The rotary switch is used to set the operating mode and the parameters required for each circuit.

3.1 Configuration using TROVIS-VIEW

The controller can be configured with the TROVIS-VIEW software.

In this case, the TROVIS 5573 Heating and District Heating Controller is connected to the computer at the RJ-45 jack on the side of the controller.

The TROVIS-VIEW software enables the user to easily configure the controller as well as view process parameters online.

i Note

TROVIS-VIEW provides a uniform user interface that allows users to configure and parameterize various SAMSON devices using device-specific database modules. The device module 5573 can be downloaded free of charge from our website at ▶ www.samsongroup.com > DOWNLOADS > Software & Drivers > TROVIS-VIEW. Further information on TROVIS-VIEW (e.g. system requirements) is available on our website and in the Data Sheet ▶ T 6661.

3.2 Connection to SAM DISTRICT ENERGY

The controller can be configured and operated on a computer, smartphone or tablet computer using the SAM DISTRICT ENERGY industry-specific application.

The controller is connected to SAM DISTRICT ENERGY over the Modbus interface using a communication gateway.

SAM DISTRICT ENERGY allows remote start-up and set-up of the controllers. Key information of the controller and entire heating system is clearly visualized at one central location.

Note

SAM DISTRICT ENERGY is a web-based solution for managing, controlling and optimizing heating systems in the local heat supply and district heating networks.
You can find more information and test SAM DISTRICT ENERGY using a demo account on our website at ▶ www.samsongroup.com > Products > Digital solutions > SAM DISTRICT ENERGY.

3.3 Technical data

Inputs	8x inputs for Pt 1000, PTC or Ni 1000 temperature sensors and two binary inputs, terminal 11 as 0 to 10 V input (e.g. for external demand or outdoor temperature signal)
Outputs [1)]	2x three-step signal: rating max. 250 V AC, 2 A Alternatively 2x on/off signal: rating max. 250 V AC, 2 A 3x pump output: rating max. 250 V AC, 2 A; all outputs are relay outputs with varistor suppression Terminal 11 as 0 to 10 V output (e.g. for continuous closed loop control, outdoor temperature, signal for external demand or pump speed control), load >5 kΩ
Optional interfaces	1x Modbus RS-485 interface for two-wire bus using RS-485 communication module (Modbus RTU protocol, data format 8N1, RJ-45 connector socket at the side)
Supply voltage	85 to 250 V, 48 to 62 Hz
Power consumption	Max. 4.7 VA, typical: 2.3 VA
Permissible ambient temperature range	0 to 55 °C (operation), –10 to +60 °C (storage and transport)
Degree of protection	IP40 according to EN 60529
Class of protection	II according to EN 61140
Degree of contamination	2 according to EN 61010-1
Overvoltage category	II according to EN 60664
Noise immunity	According to EN 61000-6-1
Noise emission	According to EN 61000-6-3
Conformity	CE · EAC
Weight	Approx. 0.5 kg

1) For systems with one control circuit, a maximum of four pumps are available

3.4 Dimensions

Panel cut-out 138 mm x 92 mm (W x H)

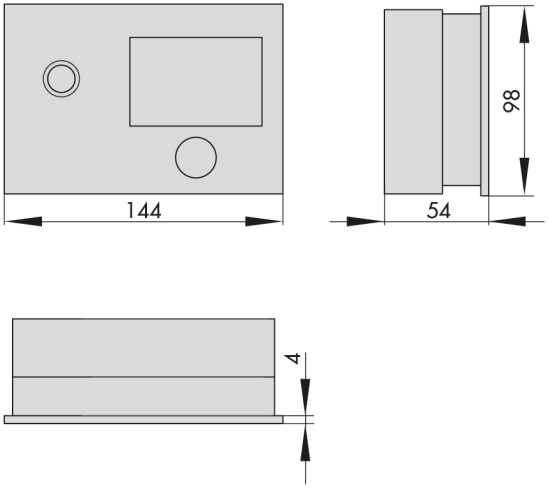

Fig. 3-1: *Dimensions in mm · Controller with standard base*

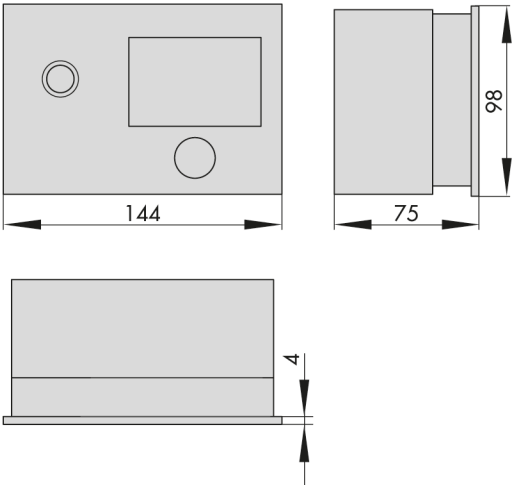

Fig. 3-2: *Dimensions in mm · Controller with high base*

3.5 Values for resistance thermometers

Pt 1000 sensors

Temperature °C	−35	−30	−25	−20	−15	−10	−5	0	+5	+10	+15	+20
Resistance Ω	862.5	882.2	901.9	921.6	941.2	960.9	980.4	1000.0	1019.5	1039.0	1058.5	1077.9

Temperature °C	+25	+30	+35	+40	+45	+50	+55	+60	+65	+70	+75	+80
Resistance Ω	1097.3	1116.7	1136.1	1155.4	1174.7	1194.0	1213.2	1232.4	1251.6	1270.8	1289.9	1309.0

Temperature °C	+85	+90	+95	+100	+105	+110	+115	+120	+125	+130	+135	+140
Resistance Ω	1328.1	1347.1	1366.1	1385.1	1404.0	1422.9	1441.8	1460.7	1479.5	1498.3	1517.1	1535.8

Temperature °C	+145	+150	+155	+160	+165	+170	+175	+180	+185	+190	+195	+200
Resistance Ω	1554.6	1573.3	1591.9	1610.5	1629.1	1647.7	1666.3	1684.8	1703.3	1721.7	1740.2	1758.6

PTC sensors

Temperature °C	−20	−10	0	+10	+20	+30	+40	+50
Resistance Ω	693	756	824	896	971	1050	1133	1220

Temperature °C	+60	+70	+80	+90	+100	+110	+120
Resistance Ω	1311	1406	1505	1606	1713	1819	1925

Type 5244 (remote control unit)

Switch position ◴, terminals 1 and 2

Temperature °C	10	15	20	25	30
Resistance Ω	679	699	720	741	762

Ni 1000 sensors

Temperature °C	−60	−50	−40	−30	−20	−10	0	+10	+20	+30	+40
Resistance Ω	695	743	791	841	893	946	1000	1056	1112	1171	1230

Temperature °C	+50	+60	+70	+80	+90	+100	+110	+120	+130	+140	+150
Resistance Ω	1291	1353	1417	1483	1549	1618	1688	1760	1833	1909	1986

Temperature °C	+160	+170	+180	+190	+200	+210	+220	+230	+240	+250
Resistance Ω	2066	2148	2232	2318	2407	2498	2592	2689	2789	2892

4 Shipment and on-site transport

The work described in this chapter is only to be performed by personnel appropriately qualified to carry out such tasks.

4.1 Accepting the delivered goods

After receiving the shipment, proceed as follows:

1. Compare the shipment received with the delivery note.
2. Check the shipment for transportation damage. Report any damage to SAMSON and the forwarding agent (refer to delivery note).

4.2 Removing the packaging from the controller

Note

Do not remove the packaging until immediately before mounting and start-up.

1. Remove the packaging from the controller.
2. Check scope of delivery (see Fig. 4-1).
3. Dispose and recycle the packaging in accordance with the local regulations.

1x	TROVIS 5573 Heating and District Heating Controller
1x	Document IP 5573 (Important Product Information)

Fig. 4-1: *Scope of delivery*

4.3 Transporting the heating controller

Transport instructions

– Protect the controller against external influences (e.g. impact).
– Protect the controller against moisture and dirt.
– Observe transport temperature depending on the permissible ambient temperature (see the 'Design and principle of operation' chapter).

4.4 Storing the controller

NOTICE

Risk of controller damage due to improper storage.

➔ *Observe the storage instructions.*
➔ *Avoid long storage times.*
➔ *Contact SAMSON in case of different storage conditions.*

Note

We recommend to regularly check the controller and the prevailing storage conditions during long storage periods.

Storage instructions

- Protect the controller against external influences (e.g. impact).
- Protect the controller against moisture and dirt. Store it at a relative humidity of less than 75 %. In damp spaces, prevent condensation. If necessary, use a drying agent or heating.
- Make sure that the ambient air is free of acids or other corrosive media.
- Observe transport temperature depending on the permissible ambient temperature (see the 'Design and principle of operation' chapter).
- Do not place any objects on the controller.

5 Installation

The work described in this chapter is only to be performed by personnel appropriately qualified to carry out such tasks.

5.1 Installation conditions

Work position

The work position for the controller is the front view onto the operating controls on the controller seen from the position of operating personnel.

Operators must ensure that, after installation of the controller, the operating personnel can perform all necessary work safely and easily access the device from the work position.

5.2 Preparation for installation

Before installation, make sure the following conditions are met:

– The controller is not damaged.

Proceed as follows:

➔ Lay out the necessary material and tools to have them ready during installation work.

5.3 Mounting the controller

The controller consists of the housing with the electronics and the base with the terminals. It is suitable for panel, wall and rail mounting (see Fig. 5-1).

Panel mounting

1. Undo the two screws (1).
2. Pull apart the controller housing and the base.
3. Make panel cut-out with the dimensions 138 x 92 mm (W x H).
4. Push the controller housing through the panel cut-out.
5. Tighten the two screws (2) to clamp the controller housing against the control panel.
6. Perform electric wiring on the base as described in Chapter 5.4.
7. Remount the controller housing.
8. Tighten the two screws (1).

Wall mounting

1. Undo the two screws (1).
2. Pull apart the controller housing and the base.
3. If necessary, drill holes with the specified dimensions in the appropriate places. Fasten the base with four screws.
4. Perform electric wiring on the base as described in Chapter 5.4.
5. Remount the controller housing.
6. Tighten the two screws (1).

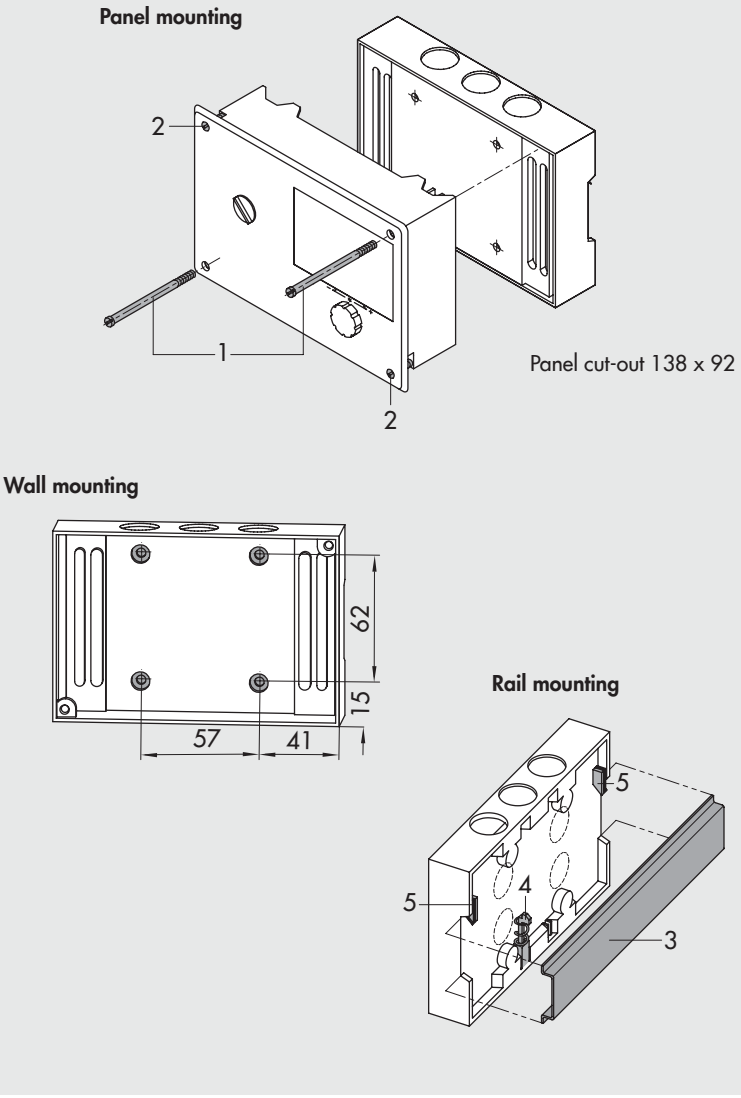

Fig. 5-1: *Dimensions in mm*

Rail mounting

1. Fasten the spring-loaded hook (4) at the bottom of the top hat rail (3).
2. Slightly push the controller upwards and pull the top hook (5) over the top hat rail. Undo the two screws (1).
3. Pull apart the controller housing and the base.
4. Perform electric wiring on the base as described in Chapter 5.4.
5. Remount the controller housing.
6. Tighten the two screws (1).

5.4 Electrical connection

⚠ DANGER

Risk of fatal injury due to electric shock.

– For electrical installation, you are required to observe the relevant electrotechnical regulations of the country of use as well as the regulations of the local power suppliers. Therefore, such work must be performed by trained and experienced personnel.

– The terminals 20, 22, 25 and 28 allow the integration of safety equipment which have a direct influence on individual electric actuators and pumps. If this is not the case, connect a jumper from terminal 18 to terminals 20, 22, 25 and 28.

➔ *Do not connect ELV cables (according to VDE 0100) to these terminals.*

➔ *Before performing any work on the terminals, disconnect the voltage supply from the heating controller.*

Notes on electric wiring

➔ Install the 230 V power supply lines and the signal lines separately and away from each other.

➔ To increase immunity, keep a minimum distance of 10 cm between the lines. Make sure the minimum distance is also kept when the lines are installed in a cabinet.

➔ Install the lines for digital signals (bus lines) and analog signals (sensor lines, analog outputs) separately and away from each other.

➔ In plants with a high electromagnetic noise level, we recommend using shielded cables for the analog signals.

➔ Ground the shield at one side, either at the control cabinet inlet or outlet, using the largest possible cross-section. Connect the central grounding point and the PE grounding conductor with a cable with at least 10 mm² wire cross-section using the shortest route.

➔ Inductances in the control cabinet, e.g. contactor coils, must be equipped with suitable interference suppressors (RC elements).

➔ Shield control cabinet elements with high field strength, e.g. transformers or frequency converters, with separators providing a good connection to the PE grounding conductor.

➔ Use wires with wire cross-sections as listed in Table 5-1 for terminals.

Overvoltage protection

– If signal lines are installed outside buildings or over large distances, make sure appropriate surge or overvoltage protection measures are taken. Such measures are indispensable for bus lines.
– The shield of signal lines installed outside buildings must have current conducting capacity and must be grounded on both sides.
– Surge diverters must be installed at the control cabinet inlet.

Connecting the heating controller

➔ If the controller housing and the base have not yet been separated: unscrew the screws on the bottom left and top right of the housing to open it to connect the wiring.

➔ To feed through cables, make holes in the marked locations at the top, bottom or back of the base of the housing and fit suitable grommets or cable glands.

➔ For wall mounting: ensure that the lines are not subject to torsion or bending by taking suitable precautions, e.g. a cable duct, before inserting them into the base.

➔ Connect as shown in Fig. 5-2 or Fig. 5-3.

Connecting sensors

The wire cross-section of the sensor cables must not be smaller than 0.5 mm².

Wiring of a room panel

➔ Connect as shown in Fig. 5-4.

Connecting actuators

– 0 to 10 V control output: use cables with a minimum wire cross-section of 0.5 mm².
– Three-step or on/off outputs: connect cables with a minimum wire cross-section of 1.5 mm² suitable for damp locations to the terminals of the controller output. We recommend checking the operating direction on start-up.

Connecting pumps

Connect all cables with a minimum 1.5 mm² wire cross-section to the terminals of the heating controller as illustrated in the wiring diagram.

i Note

The electric actuators and pumps are not automatically supplied with a voltage by the heating controller. They can be connected over terminals 20, 22, 25 and 28 to an external voltage supply. For an internal power supply, place a jumper from terminal 18 to terminals 20, 22, 25 and 28.

⚠ DANGER

Risk of fatal injury as a result of failing to observe the permissible touch voltage.

Separation of the circuits is absolutely essential when SELV equipment is connected to terminals 20, 22, 25 and 28 as this equipment has a different intended use of the supply voltage than specified in the technical data (230 V AC).

The creepage and clearance present in the base and controller do not guarantee the required dielectric strength and the safe separation of the 230 V supply voltage and the other circuits.

➔ *Take appropriate safety precautions (e.g. by using coupling relays for the control of electric actuators operated with 24 V or for ELV fault signaling contacts).*

➔ *Only connect 230 V equipment.*

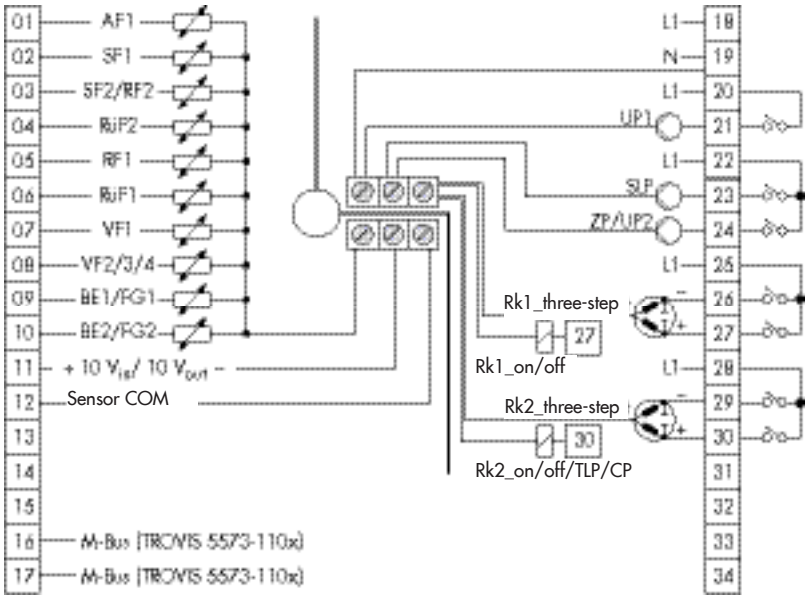

AF	Outdoor sensor	CP	Solar circuit pump
BE	Binary input	RK	Control circuit
FG	Potentiometer	UP	Circulation pump (heating)
RF	Room sensor	SLP	Storage tank charging pump
RüF	Return flow sensor	TLP	Heat exchanger charging pump
SF	Storage tank sensor	ZP	Circulation pump (DHW)
VF	Flow sensor		

Fig. 5-2: *Wiring of TROVIS 5573 Controller with standard base*

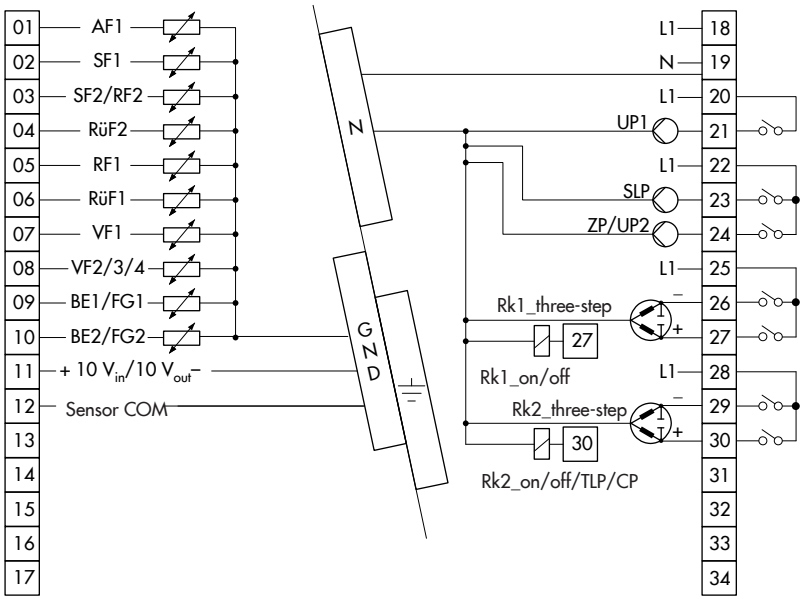

AF	Outdoor sensor
BE	Binary input
FG	Potentiometer
RF	Room sensor
RüF	Return flow sensor
SF	Storage tank sensor
VF	Flow sensor
CP	Solar circuit pump
RK	Control circuit
UP	Circulation pump (heating)
SLP	Storage tank charging pump
TLP	Heat exchanger charging pump
ZP	Circulation pump (DHW)

Fig. 5-3: *Wiring of TROVIS 5573 Controller with high base*

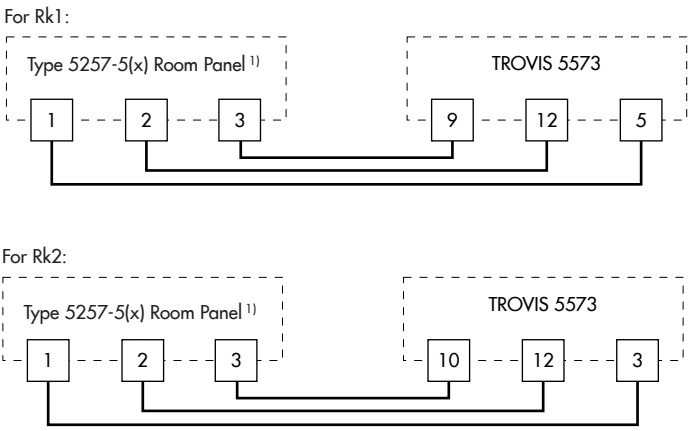

1) Type 5244 no longer available

Fig. 5-4: *Wiring of a room panel for Rk1 or Rk2*

Table 5-1: *Permissible wire cross-section for terminals*

Cable	Wire cross-section
Single-wire	0.33 to 2 mm²
Multi-wire	0.33 to 2 mm²

Length of insulation to be stripped off wire ends: 6 mm

6 Operation

The heating controller is operated on site using the operating controls on the front.

6.1 Operating controls

The operating controls are located in the front panel of the controller.

Rotary pushbutton

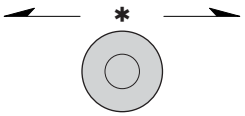

Rotary pushbutton

Turn [↻]:
Select readings, parameters and function blocks.

Press [✳]:
Confirm adjusted selection or settings.

Rotary switch

The rotary switch is used to set the operating mode and the relevant parameters for each control circuit.

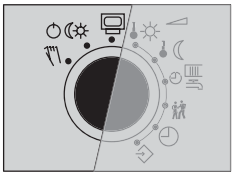

- Information level, normal switch position
- Operating modes
- Manual level

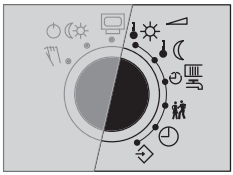

- Day set point (rated room temperature, DHW temperature)
- Night set point (reduced room temperature, DHW temperature sustaining value)
- Times-of-use for heating/DHW
- Party mode
- Controller time
- Parameter and configuration level

6.2 Optional interfaces

Two-wire bus system

The optional RS-485 communication module is required to connect the controller to a two-wire bus network for Modbus RTU communication with a process control system.

Modbus-TCP/IP communication and SAM DISTRICT ENERGY web application

The SAM MOBILE, SAM LAN or SAM HOME Gateway is required for Modbus-TCP/IP communication and for connection to the SAM DISTRICT ENERGY web application.

Accessories

Memory module	Order no. 1400-9379
Mini module	Order no. 1400-7436
Data logging module	Order no. 1400-9378
USB Converter 3	Order no. 1400-9377
TROVIS-VIEW software (free of charge)	▶ www.samsongroup.com > DOWNLOADS > Software & Drivers > TROVIS-VIEW
4-port bus hub	Order no. 1400-7140
RS-485 communication module	Order no. 8812-2002
Surge arrester SA5000	Order no. 1400-9868
SAM HOME Gateway for communication over Ethernet	Type 5660
SAM MOBILE Gateway for communication using mobile phone networks	Type 5655

7 Start-up and configuration

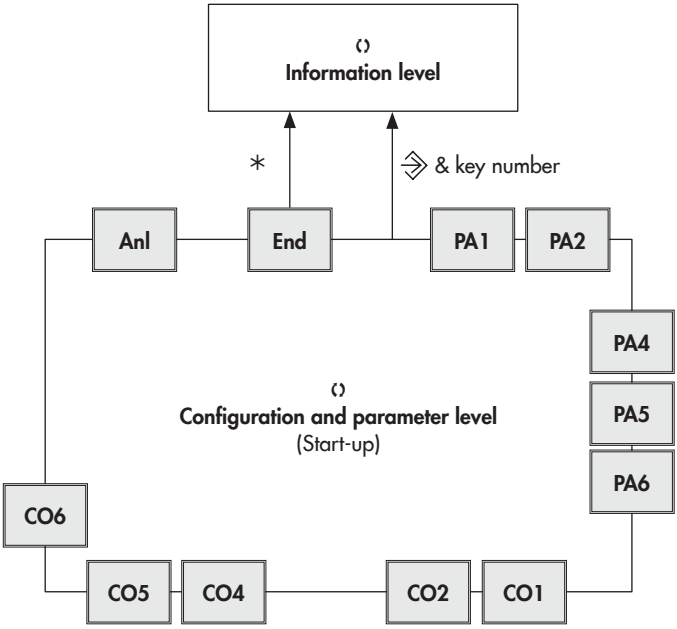

PA1/CO1: RK1 (heating circuit 1)
PA2/CO2: RK2 (heating circuit 2)
PA4/CO4: DHW circuit
PA5/CO5: System-wide
PA6/CO6: Modbus communication
Anl: System code number

Fig. 7-1: *Level structure of TROVIS 5573*

The work described in this chapter is only to be performed by personnel appropriately qualified to carry out such tasks.

Before start-up, make sure the following conditions are met:

– The controller is properly mounted according to the instructions.
– The electrical connection is properly performed.
– The firmware corresponds to the version that is currently available.
  ➔ Download the currently valid firmware at **www.samsongroup.com > DOWNLOADS > Software & Drivers > Firmware** and install it onto the controller (see the 'Servicing' chapter).

The controller is adapted to its control task by performing start-up. Start-up usually involves performing several steps:

1. Select the hydraulic system (see Chapter 7.1).
2. Change functions and parameters to adapt the system (see Chapters 7.2 and 7.3).
3. Calibrate the sensors (see Chapter 7.4).

The modifications of the controller configuration and parameter settings described in this chapter can only be performed after the valid key number has been entered.

The key number that is valid on first start-up can be found on one of the back pages of these mounting and operating instructions. To avoid unauthorized use of the service key number, remove the page or make the key number unreadable. In addition, it is possible to enter a new, customized key number (see Chapter 7.5).

7.1 Setting the system code number

Different hydraulic schematics are available. Each system configuration is represented by a system code number. The different schematics are dealt with in Appendix A. Available controller functions are described in Appendix A.

Changing the system code number resets previously adjusted function blocks to their default settings (WE). Function block parameters and parameter level settings remain unchanged.

The system code number is set in the configuration and parameter level.

How to proceed:

1. Turn the rotary switch to ⇳ (parameter and configuration level).
   Reading: **0 0 0 0**
2. Enter valid key number [↻]

3. Confirm key number [∗]
   Reading: **PA**_
4. Select **Anl** on the display.
5. Activate editing mode for the system code number [∗]
   ◢ blinks.
6. Select system code number [↻]
7. Confirm system code number [∗]
   Reading: **End**
8. Turn the rotary switch back to normal switch setting ▭ (information level).

7.2 Activating and deactivating functions

A function is activated or deactivated in the associated function block. 0 to 24 at the top of the display represent the function block numbers. When a configuration level is opened, the activated function blocks are indicated by a black square on the right-hand side below the function block number. For more details on function blocks (see Appendix A).

The functions are grouped by topics:

– CO1: RK1 (heating circuit 1)
– CO2: RK2 (heating circuit 2)
– CO4: DHW circuit
– CO5: System-wide
– CO6: Modbus communication

1. Turn the rotary switch to ◈ (parameter and configuration level).
   Reading: **0 0 0 0**
2. Enter valid key number [↻].
3. Confirm key number [∗].
   Reading: **PA**_
4. Select configuration level [↻].
5. Open configuration level [∗].

6. Select function block [↻].

   Activated function blocks are marked '- 1'.
   Deactivated function blocks are marked '- 0'.

7. Activate editing mode for the function block [✳].

   ◢ blinks.

8. Activate function block [↻].
   Reading: **F__ - 1**
   An activated function block is indicated by a black square below (right) the function block number at the top of the controller display.

   or:

   Deactivate function block [↻].
   Reading: **F__ - 0**

9. Confirm setting [✳].

   If the function block is not closed, further function block parameters can be adjusted.
   a) Set function block parameter [↻].
   b) Confirm function block parameter [✳].
   If applicable, the next function block parameter is displayed.
   Confirm all parameters to exit the opened function block.

➔ To set further function blocks, repeat the steps 6 to 9.

10. Select **End** [↻].
11. Exit configuration level [✳].

➔ To set further function blocks in other configuration levels, repeat steps 4 to 9.

12. Turn the rotary switch back to normal switch setting ▭ (information level).

i ***Note***

All function block settings are saved in a non-volatile memory in the controller.

7.3 Changing parameters

Depending on the system code number selected and the activated functions, not all parameters listed in the parameter list in the appendix (see Appendix A) might be accessible.

The parameters are grouped by topics:

– PA1: RK1 (heating circuit 1)
– PA2: RK2 (heating circuit 2)
– PA4: DHW circuit
– PA5: System-wide
– PA6: Communication parameters

1. Turn the rotary switch to ⇳ (parameter and configuration level).
   Reading: **0 0 0 0**
2. Enter valid key number [↻].
3. Confirm key number [✳].
   Reading: **PA**_
4. Select parameter level [↻].
5. Open parameter level [✳].
6. Select parameter [↻].
7. Activate editing mode for the parameter [✳].
   ◢ blinks.
8. Change parameter [↻].
9. Confirm parameter [✳].

➔ To set further parameters in the opened parameter level, repeat the steps 6 to 9.

10. Select **End** [↻].
11. Exit parameter level [✳].

➔ To set further parameters in another parameter level, repeat the steps 4 to 9.

12. Turn the rotary switch back to normal switch setting ▭ (information level).

i ***Note***

All parameter settings are saved in a non-volatile memory in the controller.

7.4 Calibrating sensors

The controller is designed for connection of Pt1000, PTC and Ni1000 sensors.

– CO5 -> F01 - 1, F02 - 0: Pt 1000
– CO5 -> F01 - 0, F02 - 0: PTC
– CO5 -> F01 - 1, F02 - 1: Ni 1000

The corresponding sensor resistance values are listed in the 'Design and principle of operation' chapter.

If the temperature values displayed at the controller differ from the actual temperatures, the measured values of all connected sensors can be recalibrated. To calibrate a sensor, the currently displayed sensor value must be changed such that it matches the temperature (reference temperature) measured directly at the point of measurement.

➔ Activate calibration in CO5 with F20.

➔ Delete the incorrectly performed calibration with F20 - 0.

How to proceed:

1. Turn the rotary switch to ⟐ (parameter and configuration level).
   Reading: **0 0 0 0**
2. Enter valid key number [↻].
3. Confirm key number [✳].
   Reading: **PA**_
4. Select CO5 configuration level [↻].
5. Open CO5 configuration level [✳].
6. Select function block F20 [↻].
7. Activate editing mode for function block F20 [✳].
8. Select sensor symbol [↻]:

Room sensor RF, heating circuit 1 and 2

Outdoor sensor AF1

Flow sensor VF, heating circuit 1 and 2

Flow sensor VF1, primary heat exchanger circuit

Flow sensor VF2 and VF4, DHW circuit

Solar collector sensor VF3

Return flow sensor RüF

Storage tank sensor SF1

Storage tank sensor SF2

Storage tank sensor of solar circuit SF2

9. Display measured value [∗].
   "°C" blinks.
10. Correct measured value [↻].
    Read the actual temperature directly from the thermometer at the point of measurement and enter this value as the reference temperature.
11. Confirm corrected measured value [∗].
    Proceed in the same manner to calibrate further sensors.
12. Select **End** [↻].
13. Turn the rotary switch back to normal switch setting (information level).

7.5 Entering customized key number

To prevent the function and parameter settings being changed by unauthorized users, a customized key number can be added to the fixed service key number. You can set the customized key number to be between 0100 and 1900.

How to proceed:

1. Turn the rotary switch to ◈ (parameter and configuration level).
   Reading: **0 0 0 0**
2. Enter key number 1995 [↻].
3. Confirm key number [✳].
4. Enter valid key number [↻].
5. Confirm key number [✳].
6. Enter customized key number [↻].
7. Confirm customized key number [✳].
   This number is the new key number.
8. Turn the rotary switch back to switch position ▣ (information level).

8 Setup

8.1 Selecting the operating mode

Day mode (rated operation): regardless of the programmed times-of-use and summer mode, the set points relevant for rated operation are used by the controller. Icon: ☼

Night mode (reduced operation): Regardless of the programmed times-of-use, the set points relevant for reduced operation are used by the controller. Icon: ☾

Control operation deactivated: regardless of the programmed times-of-use, control operation remains deactivated. The frost protection is activated, if need be. Icon: ⏻

Automatic mode: during the programmed times-of-use, the controller works in day mode (rated operation). Outside these times-of-use, the controller is in night mode (reduced operation), provided control operation has not been deactivated due to the outdoor temperature. The controller switches automatically between both operating modes. Icon: 🕘

Manual mode: valves and pumps can be controlled manually (see Chapter 8.6). Icon: ✍

9. Turn the rotary switch to ⏻☾☼ (operating modes). See the 'Operation' chapter.

   ◢ blinks.

   In systems with only one control circuit (e.g. system Anl 1.0), steps 2 and 3 (to select the control circuit) are not required.

10. Select the control circuit for which the operating mode is to be set [↻]:

    1: Heating circuit 1
    2: Heating circuit 2
    3: DHW heating/circulation pump
    Only those control circuits are available for selection which can be controlled by the selected system.

11. Confirm the selected control circuit [✳].

12. Select operating mode [↻]: ☼, ☾, ⏻ or 🕘.

13. Confirm the selected operating mode [✳].

14. Turn the rotary switch back to normal switch position ▭ (information level).

---

i ***Note***

In automatic operation, the current phase of the time program (🕘 for day mode or ☼ for night mode) is displayed in the information level together with the ☾ icon.

8.2 Schedules

The controller operates according to the schedules in automatic mode.

8.2.1 Setting the time and date

The current time and date need to be set immediately after start-up and after a power failure lasting more than 24 hours. This is the case when the time blinks on the display.

How to proceed:

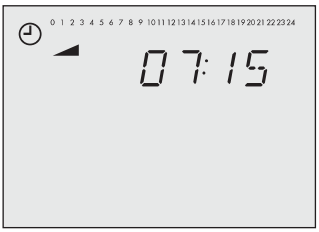

1. Turn the rotary switch to ◴ (controller time).
   Reading: Time, ◴ and ◢ blink.
2. Change the time [↻].

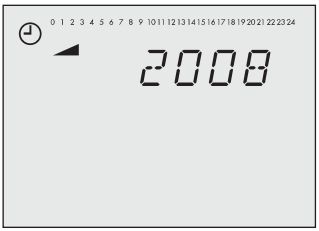

3. Confirm the time setting [✳].
   Reading: Year
4. Change year [↻].

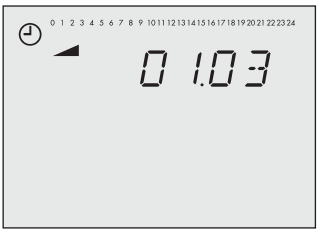

5. Confirm year [✳].
   Reading: Date (day.month)
6. Change date [↻].
7. Confirm the date setting [✳].
   Reading: Time
8. Turn the rotary switch back to normal switch position ▭ (information level).

Note

The correct time is guaranteed after a power failure of 24 hours. Normally, the correct time is still retained at least 48 hours after a power failure.

8.2.2 Setting the times-of-use

Three times-of-use can be set for each day of the week.

Parameters	Default [1]	Value range
Period/day	1-7	1-7, 1, 2, 3, 4, 5, 6, 7 with 1-7 daily, 1 = Monday, 2 = Tuesday, …, 7 = Sunday
Start first time-of-use	06:00	00:00 to 24:00 h; in steps of 15 minutes
Stop first time-of-use	22:00	00:00 to 24:00 h; in steps of 15 minutes
Start second time-of-use	22:15	00:00 to 24:00 h; in steps of 15 minutes
Stop second time-of-use	22:15	00:00 to 24:00 h; in steps of 15 minutes
Start third time-of-use	--:--	00:00 to 24:00 h; in steps of 15 minutes
Stop third time-of-use	--:--	00:00 to 24:00 h; in steps of 15 minutes

[1] Default settings applicable to the heating circuits

How to proceed:

1. Turn the rotary switch to (times-of-use).

   blinks.
   In systems with only one control circuit (e.g. system Anl 1.0), steps 2 to 5 (to select the control circuit and configure the DHW circuit) are not required.
   In systems Anl 1.5 and 1.9, only the DHW circuit is controlled. As a result, steps 2 and 3 (to select the control circuit) are not required.

2. Select the control circuit for which the time-of-use is to be programmed.

   1: Heating circuit 1
   2: Heating circuit 2
   3: DHW heating/circulation pump
   Only those control circuits are available for selection which can be controlled by the selected system.

3. Confirm the selected control circuit [∗].

   If control circuit 1 or 2 has been selected, steps 4 and 5 are not required.

4. Configure DHW circuit [ ]:

   DHW heating Circulation pump (DHW)

5. Confirm setting [∗].

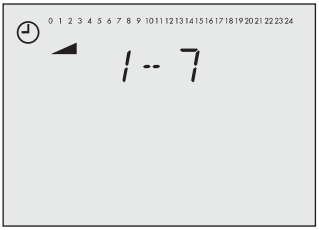

6. Select period/day for which the times-of-use are to be valid [↻].
   1-7 = daily
   1 = Monday, 2 = Tuesday, …, 7 = Sunday

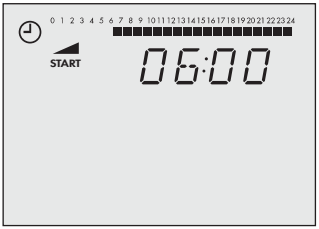

7. Activate editing mode for the period/day [∗].
   Reading: **START**, 🕘 and ◢ blink.
8. Change start time [↻].
   The time is set in steps of 15 minutes.

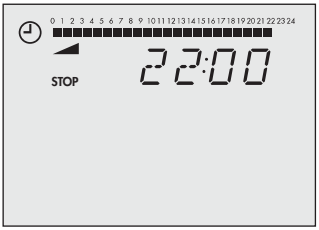

9. Confirm the start time setting [∗].
   Reading: **STOP**
10. Change stop time [↻].
    The time is set in steps of 15 minutes.
11. Confirm the stop time setting [∗].
    Reading: **START**
    The displayed time is the stop time of the first time-of-use period plus 15 minutes.

➔ To set the second and third times-of-use periods, repeat steps 8 to 11.

➔ If no further times-of-use are to be programmed for the selected time period/day, exit the menu by confirming the indicated start time twice (2x [∗]).

➔ For programming every day separately, repeat steps 6 to 11.

12. Once you have programmed all times-of-use: Turn the rotary switch back to normal switch position 🖵 (information level).

i ***Note***

Do not use the 1–7 menu to check the programmed times-of-use. If this menu is opened after the times-of-use have been programmed, the schedule programmed for Monday is also adopted for all other days of the week.

8.2.3 Setting the party timer (special time-of-use)

Using the **Party mode** function, the controller continues or activates the rated operation of the controller during the time when the party timer is active, regardless of the programmed times-of-use. After the party timer has counted down, the party time function is reset to 00:00

Parameter	Default	Value range
Continue or activate rated operation	0 h	0 to 48 h

How to proceed:

1. Turn the rotary switch to (party mode).
   blinks.
   In the systems Anl 1.0, 1.9 and 3.5, 00:00 or the remaining time of the party time are displayed. The following steps 2 and 3 (to select the control circuit) are not required.
2. Select the control circuit in which day mode is to be activated or continued [ ]:
   1: Heating circuit 1
   2: Heating circuit 2
   3: DHW circuit
   Only those control circuits are available for selection which can be controlled by the selected system.
3. Confirm the selected control circuit [∗].
   Reading: **00:00** or the remaining time of the party time
4. Extend day mode as required [ ].
   The time is set in steps of 15 minutes.
5. Turn the rotary switch back to normal switch position (information level).

i ***Note***

The party timer runs down in steps of 15 minutes.

8.2.4 Programming public holidays (special times-of-use)

On public holidays, the times-of-use specified for Sunday apply. A maximum of 20 public holidays may be entered.

Parameters	Default	Level: value range
Public holidays	–	Extended information level: 01.01 to 31.12

How to proceed:

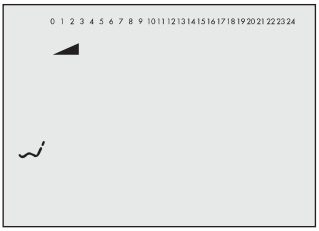

1. In the extended information level (normal switch position ▭) select the data point for public holidays [⟲].
   Reading: ⁓
2. Open data point for public holidays.
3. Select – –.– – on the display [⟲] (if applicable).
4. Activate editing mode for public holidays [∗].
   ⁓ and ◢ blink.
5. Select public holiday [⟲].
6. Confirm the public holiday setting [∗].

➔ To enter additional public holidays, re-select – –.– – and repeat the steps 4 to 6.

i Note

Public holidays can also be entered in PA5 parameter level (see the 'Start-up and configuration' chapter).

Deleting a public holiday

1. Under data point for public holidays, select the holiday you wish to delete [⟲].
2. Confirm setting [∗].
3. Select – –.– – on the display [⟲].
4. Confirm setting [∗].
   The public holiday is deleted.

i Note

We recommend deleting public holidays that are not assigned to a specific date by the end of the year. Otherwise, the public holidays are automatically carried over to the next year.

8.2.5 Programming vacation periods (special times-of-use)

The system runs constantly in reduced mode during vacation periods. A maximum of ten vacation periods can be entered. Each vacation period can be separately assigned to the heating circuits RK1, RK2 and/or the DHW circuit.

Parameters	Default	Level: value range
Vacation period (START, STOP)	–	Extended information level: 01.01 to 31.12

How to proceed:

1. In the extended information level (normal switch position ▭) select the data point for vacations [( )].
   Reading: ⊤
2. Open data point for public holidays [∗].
   Reading: **START**
3. Select **– –.– –** on the display [( )] (if applicable).
4. Activate editing mode for the start date of the vacation [∗].
   ⊤ and ◢ blink.
5. Set the start date of the vacation [( )].
6. Confirm the start date setting [∗].
   Reading: **STOP, – –.– –**
7. Set the end date of the vacation [( )].
8. Confirm the end date setting [∗].
   Black squares at the top of the display indicate the assignment of the vacation periods to the individual control circuits.

9. Select the control circuit to which the current vacation period is to apply [↻]:
   [1]■: Current vacation period applies to heating circuit 1
   [2]■: Current vacation period applies to heating circuit 2
   [3]■: –
   [4]■: Current vacation period applies to DHW circuit
   The vacation period can be assigned to a single control circuit or any combination of all three control circuit (RK1 and RK2, DHW circuit).

➔ To enter additional vacation periods, re-select **– –.– –** and repeat the steps 4 to 9.

i ***Note***

Vacations can also be entered in PA5 parameter level (see the 'Start-up and configuration' chapter).

Deleting vacations

1. Under data point for vacations, select the start date of the vacation period you wish to delete [↻].
2. Confirm setting [✳].
3. Select **– –.– –** on the display [↻].
4. Confirm setting [✳].
   The vacation period is deleted.

i ***Note***

We recommend deleting vacation periods by the end of the year. Otherwise, the vacation periods are automatically carried over to the next year.

8.3 Entering day and night set points

For the heating circuits, the desired room temperatures during the day ('Day set point') and during the night ('Night set point') can be entered into the controller. In the DHW circuit, the temperature you wish the DHW to be heated to can be set.

Switch position ☼

Parameters	Default	Value range
Day set point RK1, RK2	20 °C	–5.0 to +150.0 °C
DHW temperature set point	60 °C	Min. to max. DHW temperature

Switch position ☾

Parameters	Default	Value range
Night set point RK1, RK2	15 °C	–5.0 to +150.0 °C
DHW temperature set point	40 °C	Min. to max. DHW temperature

How to proceed:

1. Turn the rotary switch to the required data point.
   ☼ for the day set point and DHW temperature set point
   ☾ for the night set point and DHW temperature sustaining value
   ◢ blinks.

   In systems Anl 1.0, 1.9 and 3.5, the current set point is directly displayed. The following steps 2 and 3 (to select the control circuit) are not required.
2. Select the control circuit for which the set point is to be set [↻]:

   1: Heating circuit 1
   2: Heating circuit 2
   3: DHW circuit
   Only those control circuits are available for selection which can be controlled by the selected system.
3. Confirm the selected control circuit [✳].

   Reading: Current set point
4. Adjust the set point [↻].
5. Turn the rotary switch back to normal switch setting ▭ (information level).

8.4 Reset to default settings

All parameters set over the rotary switch as well as parameters in the PA1, PA2 and PA5 parameter levels can be reset to their default settings (WE). This does not apply to the maximum flow temperature and the return flow temperature limits in PA1 and PA2.

1. Turn the rotary switch to ⟐ (parameter and configuration level).
   Reading: **0 0 0 0**
2. Enter key number 1991 [↻].
3. Confirm key number [✳].
   The controller loads the default settings.
   Reading: **0 0 0 0**

8.5 Reading information

In the normal switch position ▭ (information level), the time, date, public holidays and vacation periods as well as the temperatures of connected sensors and their set points can be displayed.

---

i ***Note***

The data can also be read in the operating level ✍ (manual mode). In this case, select and confirm **InFo** *on the display and proceed as described below.*

How to proceed:

1. Select value [↻].
   Depending on how the controller is configured, the current values of the following data points appear one after the other on the display:

__:__	Time
	Room temperature of heating circuit 1, 2
	Outdoor temperature
	Temperature at flow sensor VF, heating circuit 1, 2
	Temperature at flow sensor VF1, primary heat exchanger circuit
	Temperature at flow sensor VF2, VF4, DHW circuit

Temperature at solar collector sensor VF3

Temperature at return flow sensor RüF

Temperature at storage tank sensor SF1

Temperature at storage tank sensor SF2

Temperature at storage tank sensor of solar circuit

2. Confirm a data point [∗] to read the associated set point/limit. The date is displayed when the time reading appears.

8.6 Operating the controller in manual mode

Switch to manual mode to configure all controller outputs.

NOTICE

Risk of damage of the heating circuit through low temperatures.
The frost protection does not function when the controller is in manual mode.

How to proceed:

1. Turn the rotary switch to (manual level).
2. Select output depending on the control circuit [↻]:

POS_	Correction value adjusted in percent
UP_	Switching of the circulation pump (heating)
SLP	Switching of the storage tank charging pump
TLP	Switching of the heat exchanger charging pump
CP	Switching of the solar circuit pump
ZP	Switching of the circulation pump (DHW)

3. Confirm output [∗].
   The reading blinks.
4. Change the positioning value/switching state [↻].
5. Confirm change [∗].
   The modified values remain active as long as the controller is in manual mode.

6. Turn the rotary switch back to normal switch setting ▣ (information level).
   The manual mode is deactivated.

i ***Note***

The outputs of the controller are not affected by merely turning the rotary switch to ☝ (manual level). The outputs are only changed by entering or changing the positioning values or switching states.

9 Malfunctions

A malfunction is indicated by the blinking ϟ icon on the display. Additionally, the display is illuminated for one second every 10 seconds. The 'Error' message appears. Press the rotary pushbutton to open the error level. Turn the rotary knob to read the error or possibly more. As long as an malfunction exits, the error message is included in the reading loop, even when it has not been opened by pressing the rotary pushbutton.

In the error level, the error message is displayed as specified in the following list (see Chapter 9.1).

i ***Note***

After the system code number has been changed or after restarting the controller, any error messages are suppressed for approx. three minutes.

9.1 Error list

Err 1 = Sensor failure (see Chapter 9.2)

Err 2 = Reserved

Err 3 = Disinfection temperature not reached (see Appendix A)

Err 4 = Max. charging temperature reached (see Appendix A)

Err 5 = Reserved

Err 6 = Temperature monitor alarm (see Chapter 9.3)

Err 7 = Unauthorized access occurred

Err 8 = Error message of a binary input

All error messages, except for Err 1 can be confirmed in the error level.

Confirming error messages

1. Select **Clr** [↺].
2. Confirm error message [✳].

9.2 Sensor failure

As described in the error list, sensor failures are indicated by displaying Err 1 error message in the error level. For detailed information, exit the error level and view the different temperature values in the information level: each sensor icon displayed together with three dashes instead of the measured value indicates a defective sensor. The following list explains how the controller responds to the failure of the different sensors.

– **Outdoor sensor AF1:** when the outdoor sensor fails, the controller uses a flow temperature set point of 50 °C or the 'Max. flow temperature' when the max. flow temperature (set in PA1, 2) is lower than 50 °C. With the setting CO1, 2 -> F05 - 1 (underfloor heating), the flow temperature set point is 30 °C in the event of a malfunction.
– **Flow sensor(s) in heating circuit(s):** when the flow sensors in the heating circuits are defective, the associated valve moves to 30 % travel. DHW heating which use such a sensor to measure the charging temperature is suspended.
– **Flow sensors in the DHW circuit with control valve:** when the flow sensor VF4 fails, the controller behaves as if VF4 has not been configured. As soon as the control of the charging temperature/DHW temperature becomes impossible (VF2 defective), the associated valve is closed.
– **Return flow sensors RüF1/RüF2:** when the return flow sensor fails, the controller continues operation without return flow temperature limitation.
– **Room sensors RF1/RF2:** when the room sensor fails, the controller uses the settings for operation without room sensor. The controller, for example switches from optimizing mode to reduced operation. The adaptation mode is canceled. The last determined heating characteristic remains unchanged.
– **Storage tank sensors SF1/SF2:** when one of the two sensors fails, the storage tank is no longer charged (exception: solar system).
– **Solar circuit sensors SF, VF, RüF:** when one of the two sensors fails, the storage tank in the solar circuit is no longer charged.

9.3 Temperature monitoring

When a system deviation greater than 10 °C persists in a control circuit for 30 minutes, an 'Err 6' message (temperature monitoring alarm) is generated.

Functions	Default	Configuration
Temperature monitoring	0	CO5 -> F19 - 1

9.4 Error status register

The error status register is used to indicate controller or system errors.

Error message	Meaning	Decimal value	
Err 1	Sensor failure	1	1
Err 2	–	2	
Err 3	Disinfection temperature not reached	4	
Err 4	Max. charging temperature reached	8	
Err 5	–	16	
Err 6	Temperature monitor alarm	32	32
Err 7	Unauthorized access occurred	64	
Err 8	Error message of a binary input	128	
Err 9	–	256	
			Total
Example: Value of error status register when a sensor fails and a temperature monitoring alarm =			33

10 Servicing

The work described in this chapter is to be performed only by personnel appropriately qualified to carry out such tasks.

10.1 Recommended inspection and testing

We recommend inspection and testing according to Table 10-1.

Table 10-1: *Recommended inspection and testing*

Inspection and testing	Action to be taken in the event of a negative result
Check the markings, labels and nameplates on the controller for their readability and completeness.	➔ Immediately renew damaged, missing or incorrect nameplates or labels.
	➔ Clean any inscriptions that are covered with dirt and are illegible.
Check the electric wiring.	➔ If any wires are loose, open the controller housing and tighten the terminal screws (see the 'Installation' chapter).
	➔ Renew damaged wires.
Check whether the firmware is up to date.	➔ Download the currently valid software at ▶ **www.samsongroup.com > DOWNLOADS > Software & Drivers > Firmware** [1].
Compare the temperature values displayed at the controller with the actual temperatures at the point of measurement.	➔ If the displayed and actual temperatures differ, calibrate the sensors (see the' Start-up and configuration' chapter).

[1] See Chapter 10.2.

Tip

The SAMSON NE53 newsletter keeps users up to date on any software or hardware revisions in accordance with NAMUR Recommendation NE 53. You can subscribe to the newsletter at ***www.samsongroup.com > SERVICE > NE53 newsletter****.*

10.2 Firmware update

10.2.1 Update over RS-232 interface

Requirements

– Computer with Microsoft Windows® operating system
– USB/RS-232 adapter (order no. 8812-2001)
– RS-232 to computer communication module (order no. 8812-2003)

How to proceed:

1. Download the latest version of the tool to install firmware update files (boot manager) and the currently valid firmware file at ▶ www.samsongroup.com > DOWNLOADS > Software & Drivers > Firmware.
2. Connect the USB/RS-232 adapter to the USB port of the computer.
3. Connect the RS-232 to computer communication module to the USB/RS-232 adapter.
4. Connect the communication module using the supplied RJ45 patch cable to the controller (port at the side).

---

i ***Note***

The COM port assigned for the USB/RS-232 adapter must only have one digit. If a two-digit number has been assigned to the COM port, change it in the device manager (properties of the USB serial port > Anschlusseinstellungen (connection settings) > Erweitert (advanced) before starting the boot manager.

---

5. Start the boot manager and click [Wählen] (select) to select and load the firmware file.
6. Select 'COM-Port' in the 'Verbindung' (connection) field.
7. Click [Erweitert] (advanced) and enter the COM port assigned to the USB/RS-232 adapter.
8. Change the Baud rate to '19200' if it is not set by default.
9. Do not change any other settings. Click [Updaten] (update).

The software tool searches for the controller.

➔ Disconnect the controller from the supply voltage and wait around five seconds before re-starting it.

The update runs fully automatically.

The update progress is indicated on the controller's display by the 'r S232' reading. It takes around two minutes for the green progress in the boot manager to reach 100 %.

The message 'Update wurde erfolgreich durchgeführt' (update completed) appears. The controller restarts.

➔ If the update could not be completed properly (e.g. because the connection was interrupted during the update), click [Abbruch] (cancel) and click [Updaten] (update) to restart the procedure.

➔ Contact SAMSON's After-Sales Service if the firmware update cannot be completed successfully.

For this purpose, submit the following information:

– Error messages that appear
– All the data settings that have been performed according to these instructions
– All the data settings made in the boot manager

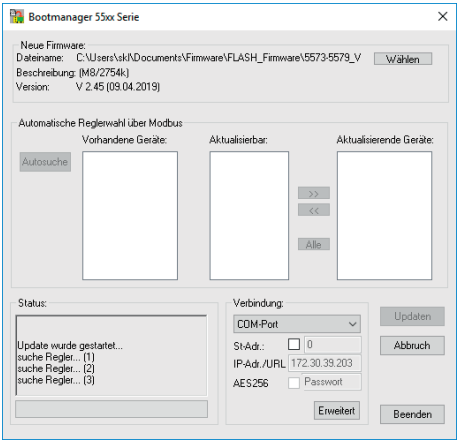

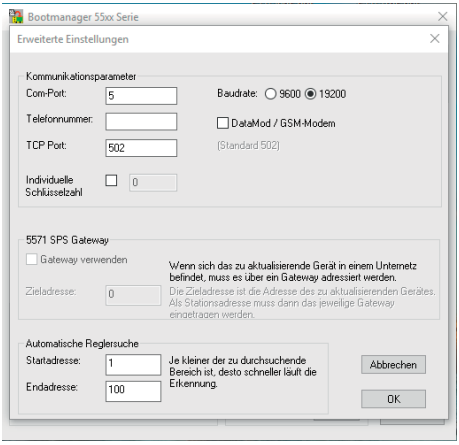

10.2.2 Update over RS-485 bus

Requirements

– Host computer
– Firmware file

How to proceed:

1. Download the latest version of the tool to install firmware update files (boot manager) and the currently valid firmware file at ▶ www.samsongroup.com > DOWNLOADS > Software & Drivers > Firmware.
2. Install the boot manager tool on the host computer.
3. Exit the active Modbus RTU application running on the host computer.
4. Start the boot manager and click [Wählen] (select) to select and load the firmware file.
5. Select 'COM-Port' in the 'Verbindung' (connection) field.
6. In [Erweitert] (advanced), enter the same COM port and Baud rate as used in the Modbus RTU application.
7. Check the 'St-Adr.' check box and enter the Modbus station address of the controller to be updated in the input field next to the box (Modbus station address = 1. Parameter in **PA6**).
8. Do not change any other settings. Click [Updaten] (update).

The update runs fully automatically. It takes around three minutes for the green progress in the boot manager to reach 100 %. The message 'Update wurde erfolgreich durchgeführt' (update completed) appears. The controller restarts.

➔ If an update could not be completed properly (e.g. because the connection was interrupted during the update), click [Abbruch] (cancel), uncheck the 'Stationadressen-Modus' (station address mode) box and click [Updaten] (update) to restart the procedure.

i ***Note***

It is not possible to restart the update process if another controller is connected to the RS-485 bus, which is in the boot mode after a failed update.

➔ Contact SAMSON's After-Sales Service if the firmware update cannot be completed successfully.

For this purpose, submit the following information:

– Error messages that appear
– All the data settings that have been performed according to these instructions
– All the data settings made in the boot manager

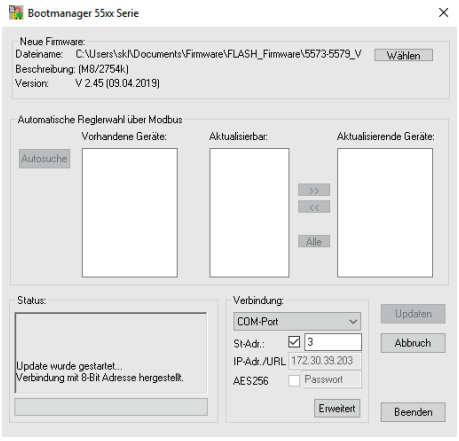

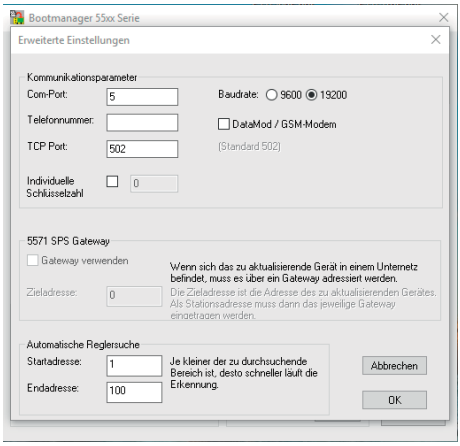

10.2.3 Update over Ethernet

Requirements

– Host computer

How to proceed:

1. Download the latest version of the tool to install firmware update files (boot manager) and the currently valid firmware file at ▶ www.samsongroup.com > DOWNLOADS > Software & Drivers > Firmware.
2. Install the boot manager tool on the host computer.
3. Exit the active Modbus TCP application running on the host computer.
4. Start the boot manager and click [Wählen] (select) to select and load the firmware file.
5. Select 'Modbus-TCP-Gateway' in the 'Verbindung' (connection) field.

6. Enter the IP address or URL of the Modbus TCP gateway or SAM HOME gateway in the 'IP-Adr./URL' field.
7. If necessary, click [Erweitert] (advanced) to change the TCP port (default: 502).

Note

The Baud rate does not need to be changed.

8. Check the 'St-Adr.' check box and enter the Modbus station address of the controller to be updated in the input field next to the box (Modbus station address = 1. Parameter in **PA6**).
9. Do not change any other settings. Click [Updaten] (update).

The update runs fully automatically. It takes around three minutes for the green progress in the boot manager to reach 100 %. The message 'Update wurde erfolgreich durchgeführt' (update completed) appears. The controller restarts.

➔ If an update could not be completed properly (e.g. because the connection was interrupted during the update), click [Abbruch] (cancel), uncheck the 'Stationadressen-Modus' (station address mode) box and click [Updaten] (update) to restart the procedure.

Note

It is not possible to restart the update process, if another controller exists in the network, which is in the boot mode after a failed update.

➔ Contact SAMSON's After-Sales Service if the firmware update cannot be completed successfully.

For this purpose, submit the following information:

- Error messages that appear
- All the data settings that have been performed according to these instructions
- All the data settings made in the boot manager

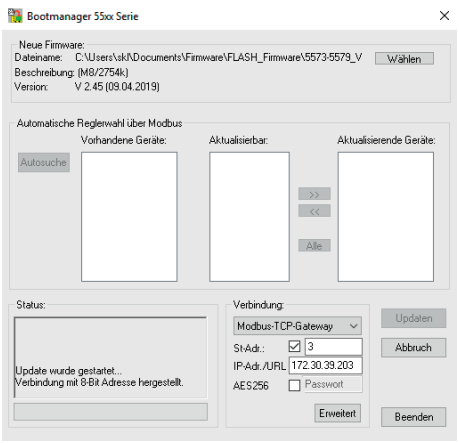

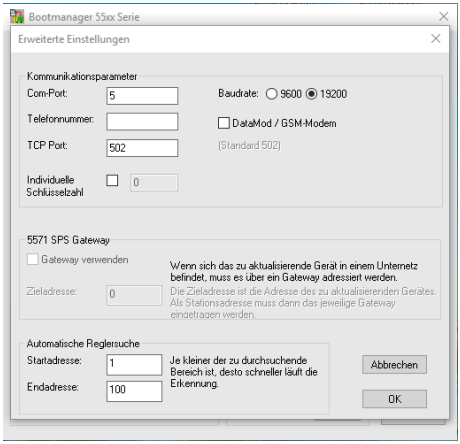

10.2.4 Automatic firmware update for several controllers over RS-485 bus or Ethernet

Requirements

– Host computer

How to proceed:

1. Download the latest version of the tool to install firmware update files (boot manager) and the currently valid firmware file at ▶ **www.samsongroup.com > DOWNLOADS > Software & Drivers > Firmware**.
2. Install the boot manager tool on the host computer.
3. Exit the active Modbus application running on the host computer.
4. Start the boot manager and click [Wählen] (select) to select and load the firmware file.
5. Select the following from the drop-down list in the 'Verbindung' (connection) field:
   – For RS-485 communication: 'COM-Port'
   – For Ethernet communication: 'Modbus-TCP-Gateway'
6. When 'Modbus-TCP-Gateway' is selected: enter the IP address or URL of the Modbus TCP gateway or SAM HOME gateway in the 'IP-Adr./URL' field.
7. Changes to settings in [Erweitert] (advanced):

– When 'COM-Port' is selected: enter the same port and Baud rate as used in the application.
– When 'Modbus-TCP-Gateway' is selected: change the TCP port (default: 502), if necessary.

i ***Note***

The Baud rate does not need to be changed when Modbus TCP or a SAM-HOME gateway is used.

Automatic controller search

To optimize the automatic update process of several controllers, the applicable address range can be defined to include the controllers concerned by clicking [Erweitert] (advanced) > Automatische Reglersuche (automatic controller search).

➔ Click [Autosuche] (auto search).

All the devices found by the 'Autosuche' (auto search) are listed in the 'Vorhandene Geräte' (existing devices) field. Station address, product number, firmware and hardware versions are shown.

All devices that can be updated are listed in the 'Aktualisierbar' (updatable) field.

➔ Select the devices to be updated.

– Click [Alle] (all).

  All devices that have been found are updated.

  or:

– Select individual devices.

The selected devices are updated.

After the update is completed, all updated controllers are marked 'OK'.

➔ If an update could not be completed properly (e.g. because the connection was interrupted during the update), click [Abbruch] (cancel), uncheck the 'Automatische Reglerwahl über Modbus' (automatic controller selection over Modbus) box and click [Updaten] (update) to restart the procedure.

Note

It is not possible to restart the update process, if another controller exists in the network, which is in the boot mode after a failed update.

➔ Contact SAMSON's After-Sales Service if the firmware update cannot be completed successfully.

For this purpose, submit the following information:

- Error messages that appear
- All the data settings that have been performed according to these instructions
- All the data settings made in the boot manager

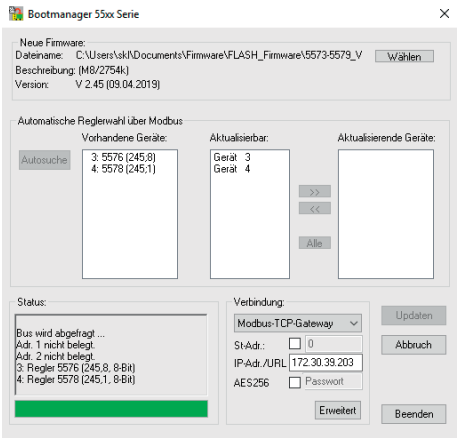

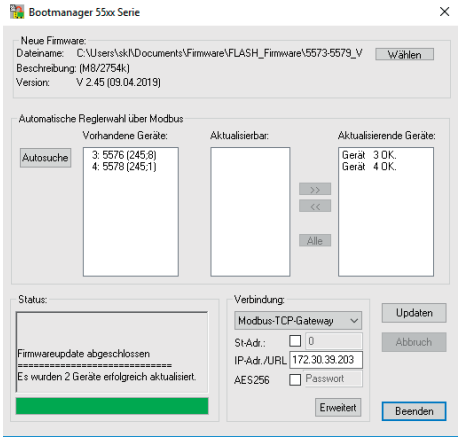

11 Decommissioning

The work described in this chapter is only to be performed by personnel appropriately qualified to carry out such tasks.

⚠ DANGER

Risk of electric shock while performing electrical connection.

For electrical installation, you are required to observe the relevant electrotechnical regulations of the country of use as well as the regulations of the local power suppliers.

- ➔ *Before connecting wiring, performing any work on the controller or opening the controller, disconnect the voltage supply and protect it against unintentional reconnection.*
- ➔ *Only use power interruption devices that can be protected against unintentional reconnection of the power supply.*
- ➔ *Do not remove any covers to perform adjustment work on live parts.*

To put the controller out of operation, the controller must be disconnected from the electrical power supply:

- ➔ When the heating controller is connected to a control station: log off the heating controller from the control station and disconnect the communication cable.
- ➔ Controller connected to TROVIS-VIEW: remove the connecting cable from the RJ-45 jack.
- ➔ Disconnect the supply voltage and protect it against unintentional reconnection.
- ➔ Unscrew the top left and right screws on the front of the controller to open the controller housing.
- ➔ Disconnect the wires from the terminals.
- ➔ Pull the wires out of the cable ducts.

12 Removal

The work described in this chapter is only to be performed by personnel appropriately qualified to carry out such tasks.

Panel mounting

1. Put the controller out of operation (see the 'Decommissioning' chapter).
2. Unscrew the top left and bottom right screws to unfasten the controller housing from the panel.

Wall mounting

1. Put the controller out of operation (see the 'Decommissioning' chapter).
2. Unscrew the fastening screws and remove the back of the housing from the wall.

Rail mounting

1. Put the controller out of operation (see the 'Decommissioning' chapter).
2. Unscrew the top left and bottom right screws to unfasten the controller housing from the top-hat rail.

13 Repairs

A defective controller must be repaired or replaced.

NOTICE

Risk of controller damage due to incorrect service or repair work.

➔ *Do not perform any repair work on your own.*

➔ *Contact SAMSON's After-sales Service for service and repair work.*

13.1 Returning devices to SAMSON

Defective controllers can be returned to SAMSON for repair.

Proceed as follows to return devices to SAMSON:

1. Put the controller out of operation (see the 'Decommissioning' chapter).
2. Remove the controller (see the 'Removal' chapter).
3. Proceed as described on the Returning goods page of our website
   ▶ www.samsongroup.com > Service > After-sales Service > Returning goods

14 Disposal

SAMSON is a producer registered at the following European institution
▶ https://www.ewrn.org/national-registers/national-registers.
WEEE reg. no.:
DE 62194439/FR 025665

➔ Observe local, national and international refuse regulations.

➔ Do not dispose of components, lubricants and hazardous substances together with your other household waste.

Note

We can provide you with a recycling passport according to PAS 1049 on request. Simply e-mail us at aftersalesservice@samsongroup.com giving details of your company address.

Tip

On request, we can appoint a service provider to dismantle and recycle the product as part of a distributor take-back scheme.

15 Certificates

The following certificates are included on the next pages:

– EU declaration of conformity

– TR CU certificate

The certificates shown were up to date at the time of publishing. The latest certificates can be found on our website:

▶ www.samsongroup.com > Products > Automation Systems > 5573

EU declaration of conformity

SMART IN FLOW CONTROL.

SAMSON

EU Konformitätserklärung / EU Declaration of Conformity / Déclaration UE de conformité

Die alleinige Verantwortung für die Ausstellung dieser Konformitätserklärung trägt der Hersteller/
This declaration of conformity is issued under the sole responsibility of the manufacturer/
La présente déclaration de conformité est établie sous la seule responsabilité du fabricant.

Für das folgende Produkt / For the following product / Nous certifions que le produit

Heizungsregler / Heating Controller / Régulateur de chauffage
Typ / Type / Type TROVIS 5573

wird die Konformität mit den einschlägigen Harmonisierungsrechtsvorschriften der Union bestätigt /
the conformity with the relevant Union harmonisation legislation is declared with/
est conforme à la législation d'harmonisation de l'Union applicable selon les normes:

EMC 2014/30/EU	EN 61000-6-1:2007, EN 61000-6-3:2007 +A1:2011, EN 55022:2010
LVD 2014/35/EU	EN 60730-1:2016, EN 50344:2001
RoHS 2011/65/EU	EN 50581:2012

Hersteller / Manufacturer / Fabricant:

SAMSON AKTIENGESELLSCHAFT
Weismüllerstraße 3
D-60314 Frankfurt am Main
Deutschland/Germany/Allemagne

Frankfurt / Francfort, 2017-07-29

Im Namen des Herstellers/ On behalf of the Manufacturer/ Au nom du fabricant.

i.V. Gert Nahler

Gert Nahler
Zentralabteilungsleiter/Head of Department/Chef du département
Entwicklung Automation und Integrationstechnologien/
Development Automation and Integration Technologies

i.V. H. Zager

Hanno Zager
Leiter Qualitätssicherung/Head of Quality Managment/
Responsable de l'assurance de la qualité

ce_5573-0_de_en_fr_nn07.pdf

SAMSON AKTIENGESELLSCHAFT
Weismüllerstraße 3 60314 Frankfurt am Main
Telefon: 069 4009-0 · Telefax: 069 4009-1507
E-Mail: samson@samson.de
Revison 07

TR CU certificate

ЕВРАЗИЙСКИЙ ЭКОНОМИЧЕСКИЙ СОЮЗ

СЕРТИФИКАТ СООТВЕТСТВИЯ

EAC

№ ЕАЭС RU C-DE.ЭА11.В.00051/19

Серия RU № 0197360

ОРГАН ПО СЕРТИФИКАЦИИ Общества с ограниченной ответственностью «ТМС РУС». Место нахождения (адрес юридического лица): Российская Федерация, 127083, город Москва, улица Верхняя Масловка, дом 20, строение 2; адрес места осуществления деятельности: Российская Федерация, 127083, город Москва, улица Верхняя Масловка, дом 20, строение 2, помещения № 18, 28. Аттестат аккредитации № РОСС RU.0001.11ЭА11 от 02.07.2015. Номер телефона: +7 (495) 221-18-04; адрес электронной почты: info@tms-cs.ru.

ЗАЯВИТЕЛЬ Общество с ограниченной ответственностью «Самсон Контролс».
Место нахождения (адрес юридического лица) и адрес места осуществления деятельности: Российская Федерация, 109544, город Москва, бульвар Энтузиастов, дом 2, этаж 5, комната 11.
ОГРН 1037700041026. Номер телефона: +7 (495) 777-45-45; адрес электронной почты: samson@samson.ru.

ИЗГОТОВИТЕЛЬ «SAMSON AG Mess- und Regeltechnik».
Место нахождения (адрес юридического лица) и адрес места осуществления деятельности по изготовлению продукции: Weismullerstrasse 3, D-60314 Frankfurt am Main, Германия.

ПРОДУКЦИЯ Регуляторы электронные систем локального и центрального отопления, регуляторы промышленные TROVIS, типы 5573, 5575, 5576, 5579, 5610, 6493, 6495.
Изготовление в соответствии со стандартами, указанными в приложении к сертификату соответствия на бланке № 0676636.
Серийный выпуск.

КОД ТН ВЭД ЕАЭС 9032 89 000 0

СООТВЕТСТВУЕТ ТРЕБОВАНИЯМ технических регламентов Таможенного союза «О безопасности низковольтного оборудования» (ТР ТС 004/2011), «Электромагнитная совместимость технических средств» (ТР ТС 020/2011).

СЕРТИФИКАТ СООТВЕТСТВИЯ ВЫДАН НА ОСНОВАНИИ протокола сертификационных испытаний № 190919-008-009-02/ИР от 28.10.2019, выданного испытательной лабораторией Общества с ограниченной ответственностью «Инновационные решения», аттестат аккредитации РОСС RU.0001.21АВ90; акта о результатах анализа состояния производства № 00062-А от 04.07.2019 органа по сертификации Общества с ограниченной ответственностью «ТМС РУС»; руководства по эксплуатации 4218-5570-5610-6490-2018.РЭ.
Схема сертификации – 1с.

ДОПОЛНИТЕЛЬНАЯ ИНФОРМАЦИЯ Стандарты, в результате применения которых на добровольной основе обеспечивается соблюдение требований технических регламентов, указаны в приложении к сертификату соответствия на бланке № 0676637. Назначенный срок службы – 12 лет. Назначенный срок хранения – 2 года. Условия хранения указаны в руководстве по эксплуатации 4218-5570-5610-6490-2018.РЭ.

СРОК ДЕЙСТВИЯ С 25.12.2019 **ПО** 24.12.2024 **ВКЛЮЧИТЕЛЬНО**

Руководитель (уполномоченное лицо) органа по сертификации (подпись) Назарова Лилия Юрьевна (Ф.И.О.)

М.П.

Эксперт (эксперт-аудитор) (эксперты (эксперты-аудиторы)) (подпись) Ходоров Владимир Игоревич (Ф.И.О.)

АО «Опцион», Москва, 2019 г., «Б». Лицензия № 05-05-09/003 ФНС РФ. ТЗ № 369. Тел.: (495) 726-47-42, www.opcion.ru

ЕВРАЗИЙСКИЙ ЭКОНОМИЧЕСКИЙ СОЮЗ

ПРИЛОЖЕНИЕ

К СЕРТИФИКАТУ СООТВЕТСТВИЯ № ЕАЭС RU C-DE.ЭА11.В.00051/19

Серия RU № 0676636 Лист 1 из 1

Стандарты, в соответствии с которыми изготавливается продукция

Обозначение стандарта	Наименование стандарта
IEC 60730-1:2013 / Cor. 1:2014	Automatic electrical controls for household and similar use. Part 1. General requirements. Corrigendum 1
EN 50344-1:2002	Routine tests for controls within the scope of the EN 60730 series. General requirements
EN 55032:2012	Electromagnetic compatibility of multimedia equipment - Emission requirements
EN 61000-6-1-2007	Electromagnetic compatibility (EMC) - Part 6-1: Generic standards - Immunity for residential, commercial and light-industrial environments
IEC 61000-6-2:2016	Electromagnetic compatibility (EMC). Part 6-2: Generic standards. Immunity for industrial environments
EN 61000-6-3:2007	Electromagnetic compatibility (EMC). Part 6-3: Generic standards. Emission standard for residential, commercial and light-industrial environments
IEC 61010-1:2010	Safety requirements for electrical equipment for measurement, control, and laboratory use. Part 1: General requirements
EN 61326-1:2013	Electrical equipment for measurement, control and laboratory use. EMC requirements. Part 1: General requirements

Руководитель (уполномоченное лицо) органа по сертификации _____ (подпись) Назарова Лилия Юрьевна (Ф.И.О.)

М.П.

Эксперт (эксперт-аудитор) (эксперты (эксперты-аудиторы)) _____ (подпись) Ходоров Владимир Игоревич (Ф.И.О.)

АО «Опцион», Москва, 2019 г., «Б». Лицензия № 05-05-09/003 ФНС РФ. ТЗ № 369. Тел.: (495) 726-47-42, www.opcion.ru

ЕВРАЗИЙСКИЙ ЭКОНОМИЧЕСКИЙ СОЮЗ

ПРИЛОЖЕНИЕ

К СЕРТИФИКАТУ СООТВЕТСТВИЯ № ЕАЭС RU C-DE.ЭА11.В.00051/19

Серия RU № 0676637 Лист 2 из 2

Стандарты, в результате применения которых на добровольной основе обеспечивается соблюдение требований технического регламента

Обозначение стандарта	Наименование стандарта
ГОСТ IEC 61010-1-2014	Безопасность электрических контрольно-измерительных приборов и лабораторного оборудования. Часть 1. Общие требования
ГОСТ Р 51522.1-2011 (МЭК 61326-1:2005) подразделы 6.2 и 7.2	Электрическое оборудование для измерения, управления и лабораторного применения. Часть 1. Общие требования и методы испытаний
ГОСТ 30804.6.1-2013 (IEC 61000-6-1:2005) раздел 8	Совместимость технических средств электромагнитная. Устойчивость к электромагнитным помехам технических средств, применяемых в жилых, коммерческих зонах и производственных зонах с малым энергопотреблением. Требования и методы испытаний
ГОСТ 30804.6.3-2013 (IEC 61000-6-3:2006) раздел 7	Совместимость технических средств электромагнитная. Электромагнитные помехи от технических средств, применяемых в жилых, коммерческих зонах и производственных зонах с малым энергопотреблением. Нормы и методы испытаний

Руководитель (уполномоченное лицо) органа по сертификации _____ (подпись) Назарова Лилия Юрьевна (Ф.И.О.)

М.П.

Эксперт (эксперт-аудитор) (эксперты (эксперты-аудиторы)) _____ (подпись) Ходоров Владимир Игоревич (Ф.И.О.)

АО «Опцион», Москва, 2019 г., «Б». Лицензия № 05-05-09/003 ФНС РФ. ТЗ № 369. Тел.: (495) 726-47-42, www.opcion.ru

16 Appendix A (configuration instructions)

This Appendix contains information on the configuration of the controller.

Note

Experimental functions are marked by . SAMSON has intentionally made them available. However, the use of such functions may lead to unforeseen malfunctions or failure. Any functions and parameters marked by are not adopted as standard until SAMSON can rule out malfunctions or failure caused by them.
You are welcome to report any errors that you discover to SAMSON's After-sales Service by sending an e-mail to aftersalesservice@samsongroup.com.

16.1 Systems

Boiler plants

Single-stage boiler systems can be configured to include any system whose heating circuits and DHW circuit include just one heat exchanger. These systems are Anl 1.0, 1.5, 1.6, 2.x, 3.0, 3.5, 4.0, 4.1 and 16.x.

The boiler can be controlled by an on/off output (CO1 -> F12 - 0).

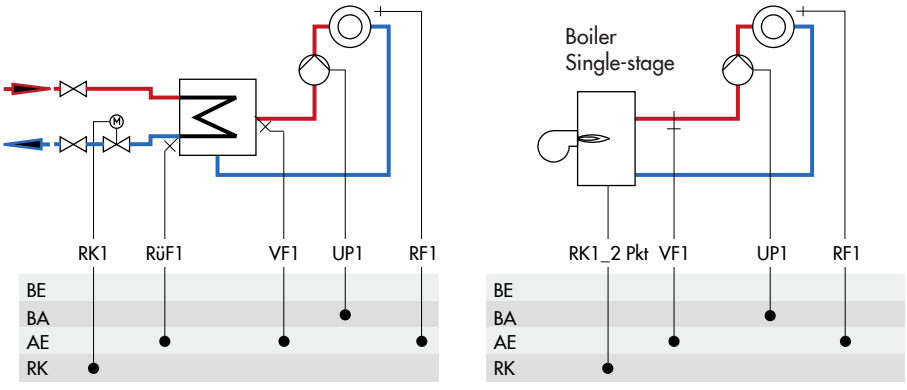

Fig. 16-1: *Configuration of a boiler system*

Primary and secondary systems

Different hydraulic schematics are available.

The systems can be designed as primary or secondary systems. The main hydraulic differences between the primary and second systems are shown in Fig. 16-2.

1. A mixing valve replaces the heat exchanger in the heating circuit/DHW circuit.
2. A storage tank charging pump replaces the solenoid valve/thermoelectric valve in the primary system.

Do not change the controller settings.

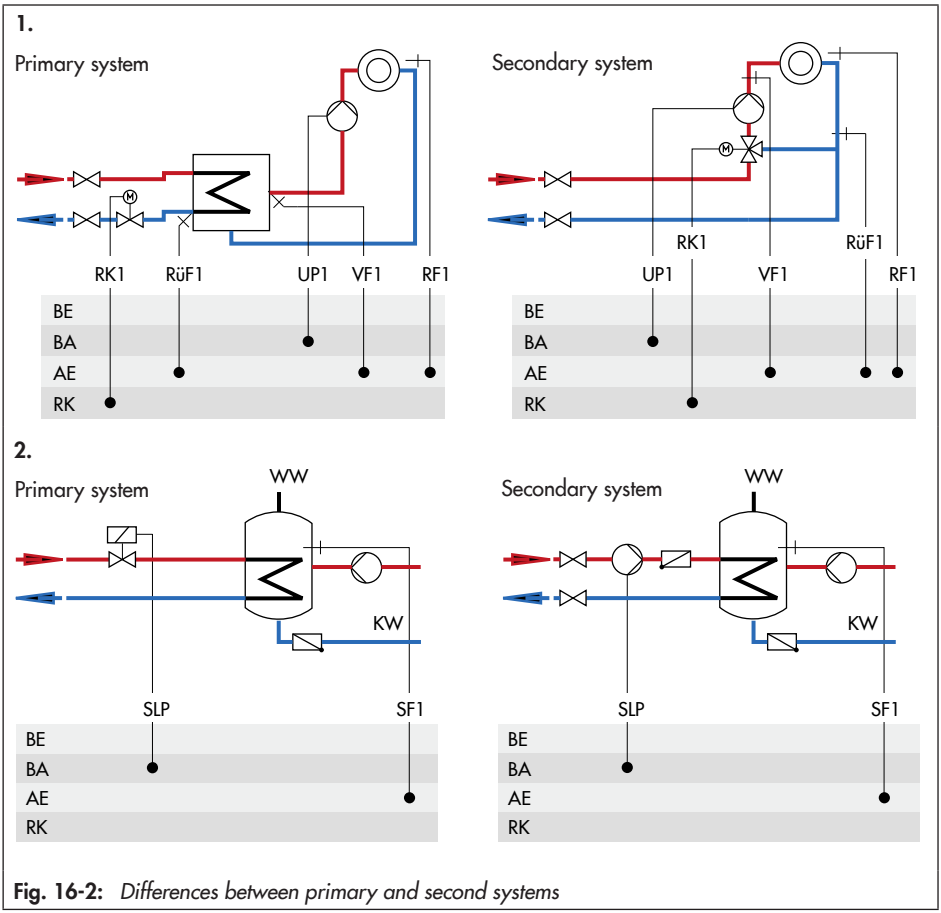

Fig. 16-2: *Differences between primary and second systems*

System Anl 1.0

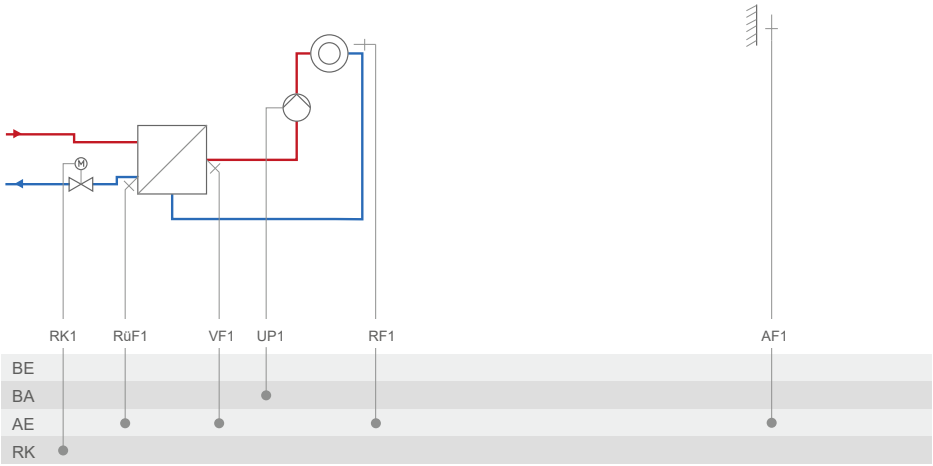

Default setting	
CO1 -> F01	- 0 (without RF1)
CO1 -> F02	- 1 (with AF1)
CO1 -> F03	- 1 (with RüF1)
CO5' -> F10	Function of the 0 to 10 V output: – 1 = Control signal RK1 – 9 = Differential temperature control — When CO1 -> F23 - 1 – 6 = External demand — When CO1 -> F18 - 1 – 5 = Outdoor temperature — When CO5 -> F23 - 1 Direction 'AA'

System Anl 1.1

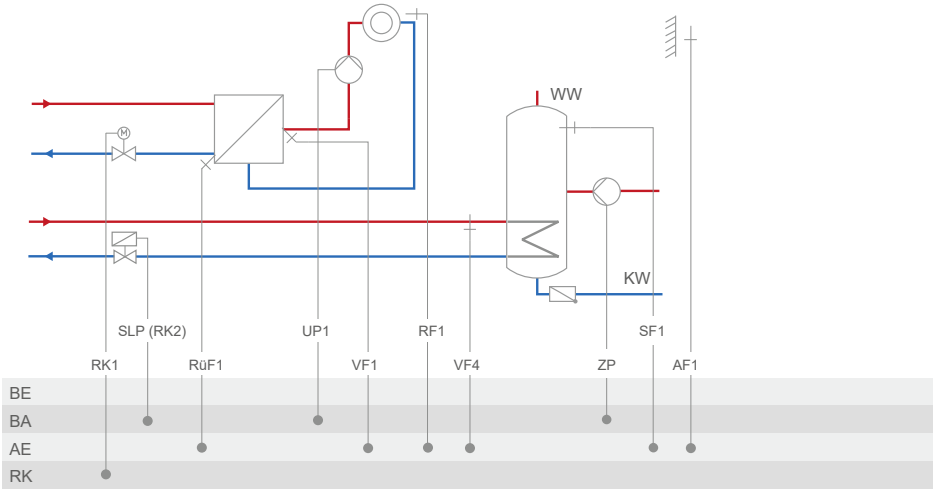

Default setting	
CO1 -> F01	- 0 (without RF1)
CO1 -> F02	- 1 (with AF1)
CO1 -> F03	- 1 (with RüF1)
CO4 -> F01	- 1 (with SF1)
CO4 -> F02	- 0 (without SF2)
CO4 -> F05	- 0 (without VF4)
CO5' -> F10	Function of the 0 to 10 V output: – 1 = Control signal RK1 – 6 = External demand — When CO1 -> F18 - 1 – 5 = Outdoor temperature — When CO5 -> F23 - 1 Direction 'AA'

System Anl 1.2

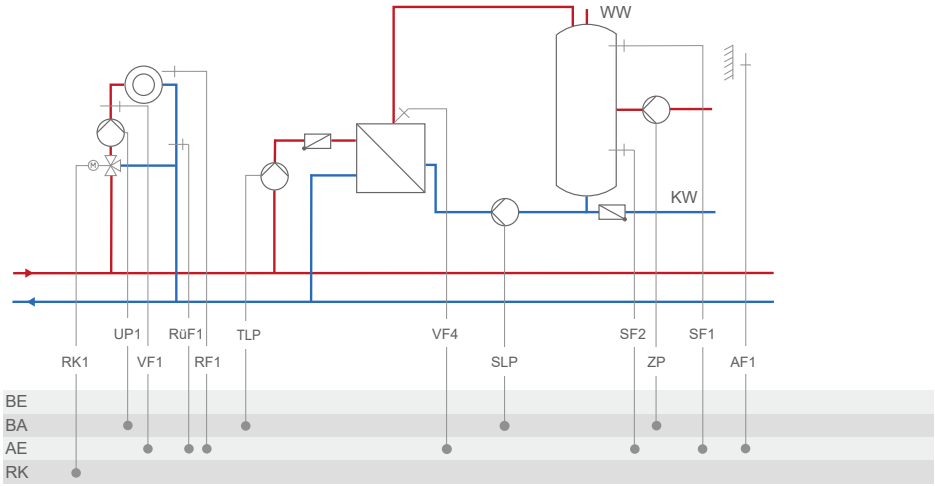

Note:	Secondary system only
Default setting	
CO1 -> F01	- 0 (without RF1)
CO1 -> F02	- 1 (with AF1)
CO1 -> F03	- 1 (with RüF1)
CO4 -> F01	- 1 (with SF1)
CO4 -> F02	- 0 (without SF2)
CO4 -> F05	- 0 (without VF4)
CO5' -> F10	Function of the 0 to 10 V output: – 1 = Control signal RK1 – 6 = External demand — When CO1 -> F18 - 1 – 7 = SLP speed — When CO4 -> F21 - 1 – 5 = Outdoor temperature — When CO5 -> F23 - 1 Direction 'AA'

System Anl 1.3

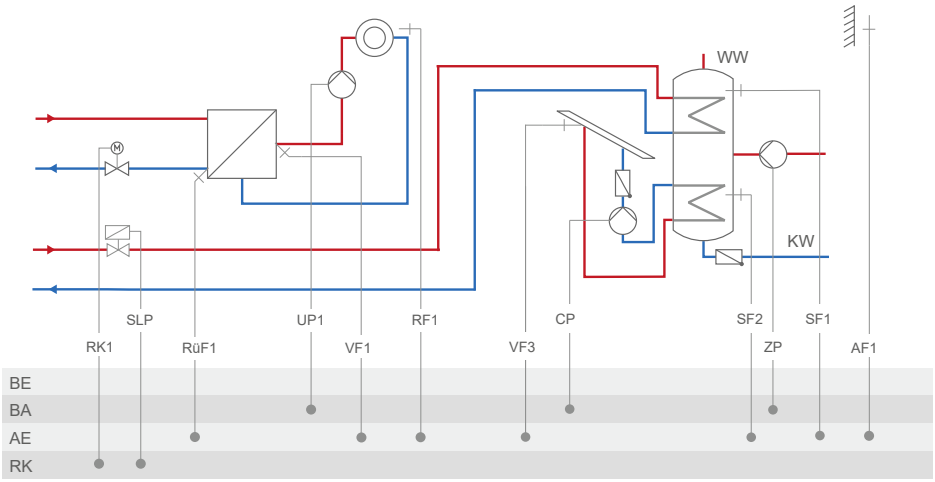

Default setting	
CO1 -> F01	- 0 (without RF1)
CO1 -> F02	- 1 (with AF1)
CO1 -> F03	- 1 (with RüF1)
CO4 -> F01	- 1 (with SF1)
CO5' -> F10	Function of the 0 to 10 V output: – 1 = Control signal RK1 – 6 = External demand — When CO1 -> F18 - 1 – 5 = Outdoor temperature — When CO5 -> F23 - 1 Direction 'AA'

System Anl 1.5

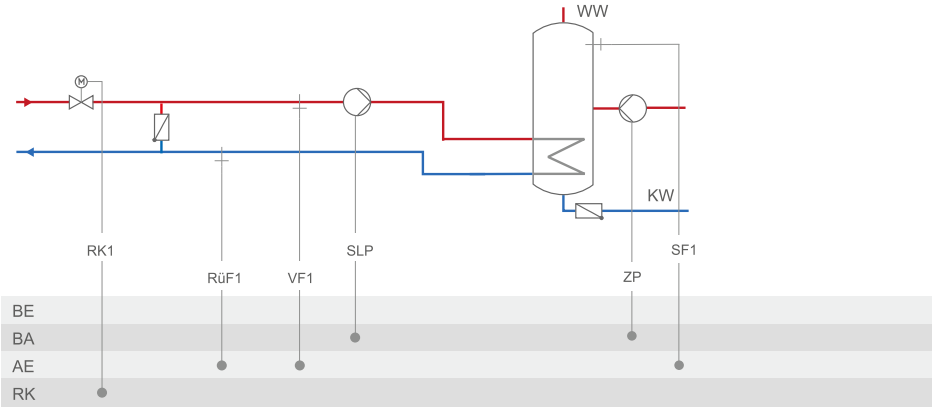

Default setting	
CO1 -> F03	- 1 (with RüF1)
CO4 -> F01	- 1 (with SF1)
CO4 -> F02	- 0 (without SF2)
CO5' -> F10	Function of the 0 to 10 V output: – 1 = Control signal RK1 – 6 = External demand — When CO1 -> F18 - 1 – 7 = SLP speed — When CO4 -> F21 - 1

System Anl 1.6 without pre-control

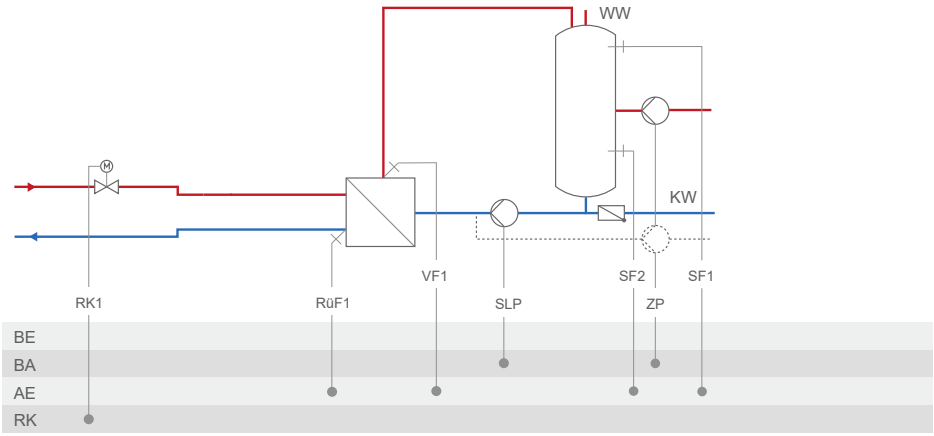

Default setting	
CO1 -> F03	- 1 (with RüF1)
CO4 -> F01	- 1 (with SF1)
CO4 -> F02	- 1 (with SF2)
CO4 -> F10	- 0 (DHW circulation return flow in storage tank)
CO5' -> F10	Function of the 0 to 10 V output: – 1 = Control signal RK1 – 6 = External demand — When CO1 -> F18 - 1 – 7 = SLP speed — When CO4 -> F21 - 1

System Anl 1.6 with pre-control

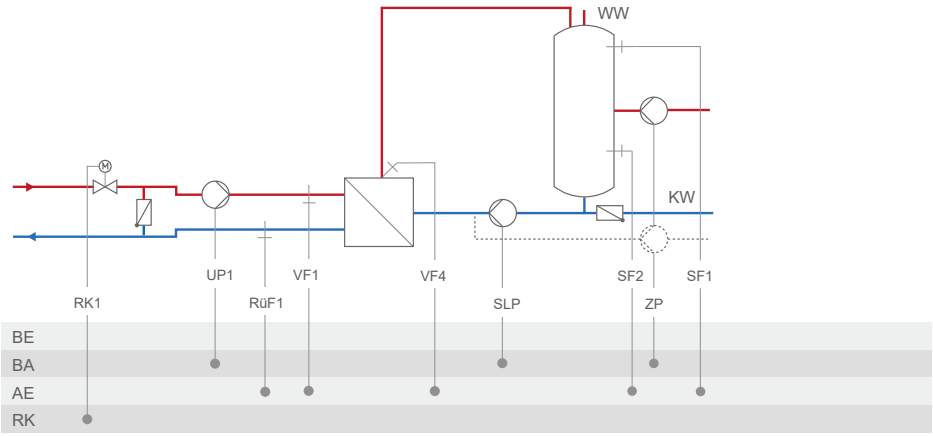

Default setting	
CO1 -> F03	- 1 (with RüF1)
CO4 -> F01	- 1 (with SF1)
CO4 -> F02	- 1 (with SF2)
CO4 -> F05	- 0 (without VF4; in this case, VF1 usually installed at the point of measurement of VF4)
CO4 -> F10	- 0 (DHW circulation return flow in storage tank)
CO5' -> F10	Function of the 0 to 10 V output: – 1 = Control signal RK1 – 6 = External demand — When CO1 -> F18 - 1 – 7 = SLP speed — When CO4 -> F21 - 1

System Anl 1.9

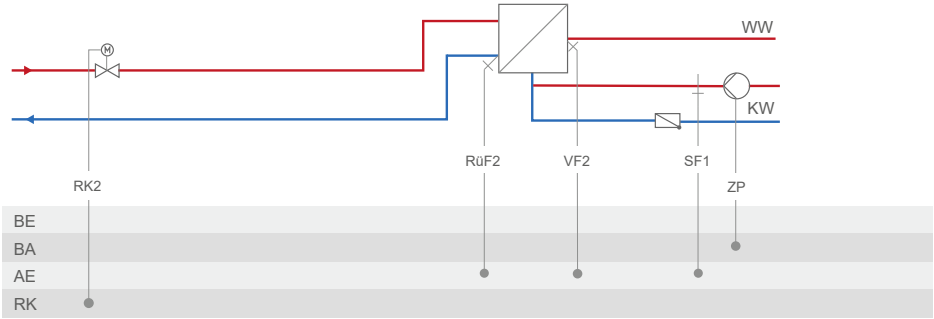

Default setting	
CO4 -> F01	- 0 (without SF1)
CO4 -> F03	- 0 (without RüF2)
CO5' -> F10	Function of the 0 to 10 V output: – 2 = Control signal RK2 – 10 = 10 V supply – 6 = External demand When CO1 -> F18 - 1

System Anl 2.0

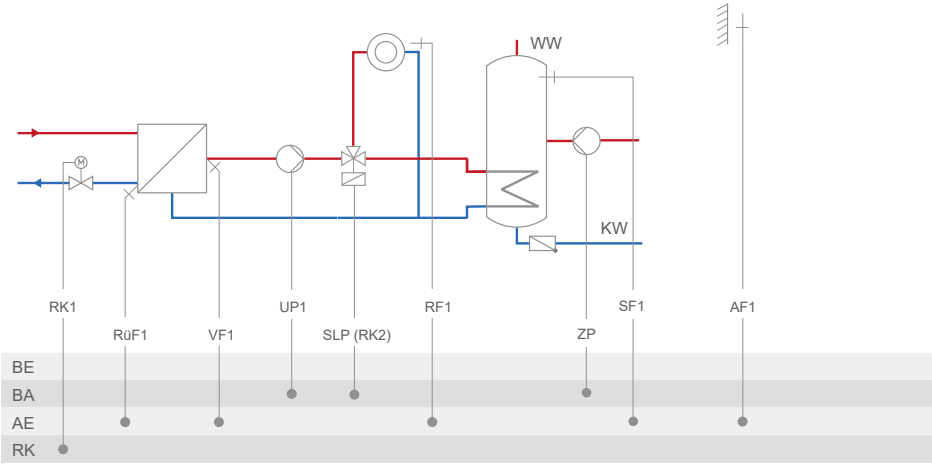

Default setting	
CO1 -> F01	- 0 (without RF1)
CO1 -> F02	- 1 (with AF1)
CO1 -> F03	- 1 (with RüF1)
CO4 -> F01	- 1 (with SF1)
CO4 -> F02	- 0 (without SF2)
CO5' -> F10	Function of the 0 to 10 V output: – 1 = Control signal RK1 – 6 = External demand — When CO1 -> F18 - 1 – 5 = Outdoor temperature — When CO5 -> F23 - 1 Direction 'AA'

System Anl 2.1

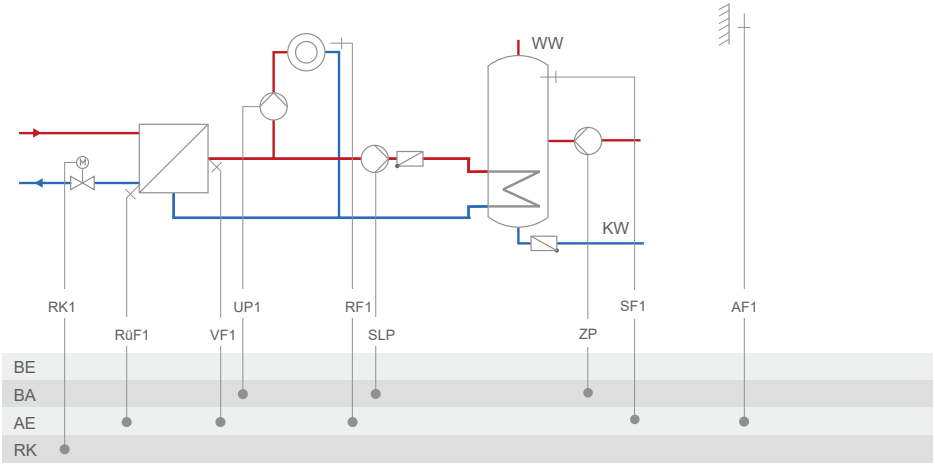

Default setting	
CO1 -> F01	- 0 (without RF1)
CO1 -> F02	- 1 (with AF1)
CO1 -> F03	- 1 (with RüF1)
CO4 -> F01	- 1 (with SF1)
CO4 -> F02	- 0 (without SF2)
CO5' -> F10	Function of the 0 to 10 V output: – 1 = Control signal RK1 – 6 = External demand — When CO1 -> F18 - 1 – 7 = SLP speed — When CO4 -> F21 - 1 – 5 = Outdoor temperature — When CO5 -> F23 - 1 Direction 'AA'

System Anl 2.2

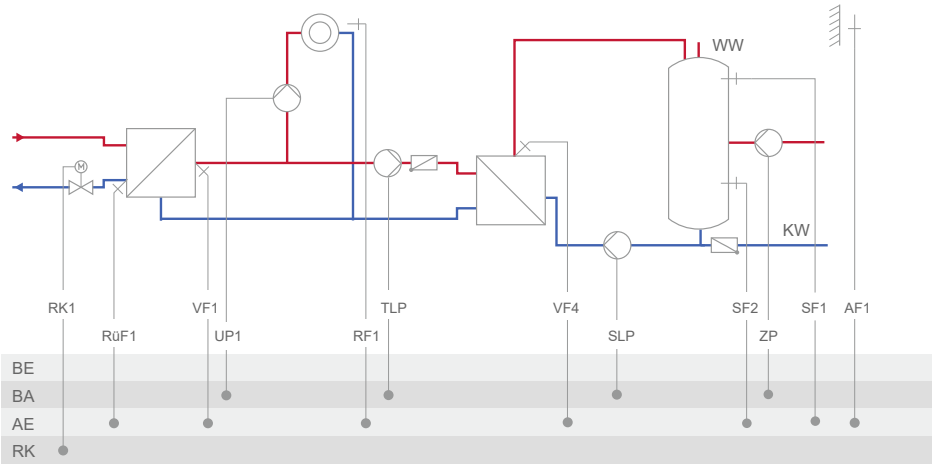

Default setting	
CO1 -> F01	- 0 (without RF1)
CO1 -> F02	- 1 (with AF1)
CO1 -> F03	- 1 (with RüF1)
CO4 -> F01	- 1 (with SF1)
CO4 -> F02	- 1 (with SF2)
CO4 -> F05	- 0 (without VF4)
CO5' -> F10	Function of the 0 to 10 V output: – 1 = Control signal RK1 – 6 = External demand — When CO1 -> F18 - 1 – 7 = SLP speed — When CO4 -> F21 - 1 – 5 = Outdoor temperature — When CO5 -> F23 - 1 Direction 'AA'

System Anl 2.3

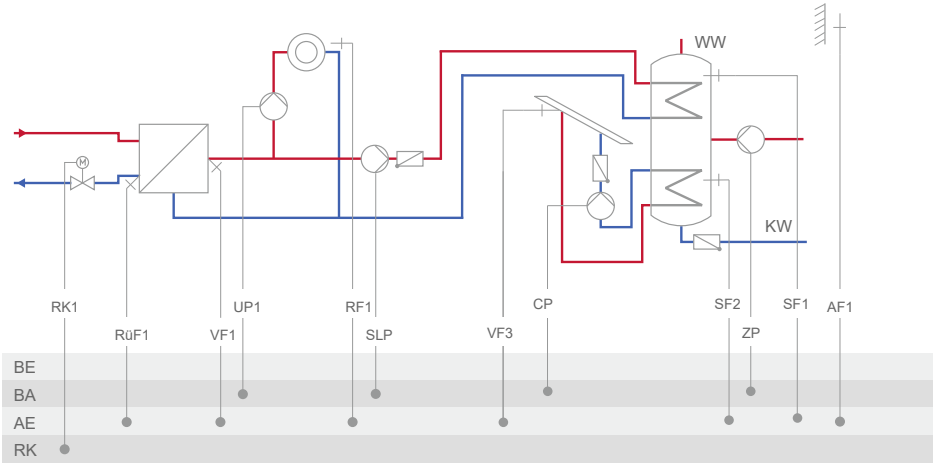

Default setting	
CO1 -> F01	- 0 (without RF1)
CO1 -> F02	- 1 (with AF1)
CO1 -> F03	- 1 (with RüF1)
CO4 -> F01	- 1 (with SF1)
CO5' -> F10	Function of the 0 to 10 V output: – 1 = Control signal RK1 – 6 = External demand — When CO1 -> F18 - 1 – 7 = SLP speed — When CO4 -> F21 - 1 – 5 = Outdoor temperature — When CO5 -> F23 - 1 Direction 'AA'

System Anl 3.0

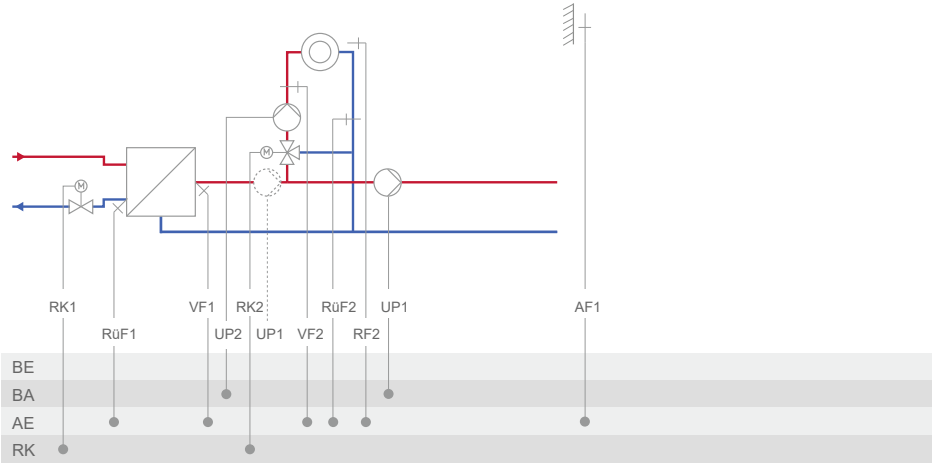

Default setting	
CO1 -> F02	- 1 (with AF1)
CO1 -> F03	- 1 (with RüF1)
CO2 -> F01	- 0 (without RF2)
CO2 -> F02	- 1 (with AF1)
CO2 -> F03	- 0 (without RüF2)
CO5 -> F14	- 0 (UP1 only active during the processing for an external demand)
CO5' -> F10	Function of the 0 to 10 V output: – 1 = Control signal RK1 – 2 = Control signal RK2 – 6 = External demand — When CO1 -> F18 - 1 – 5 = Outdoor temperature — When CO5 -> F23 - 1 Direction 'AA'

System Anl 3.5

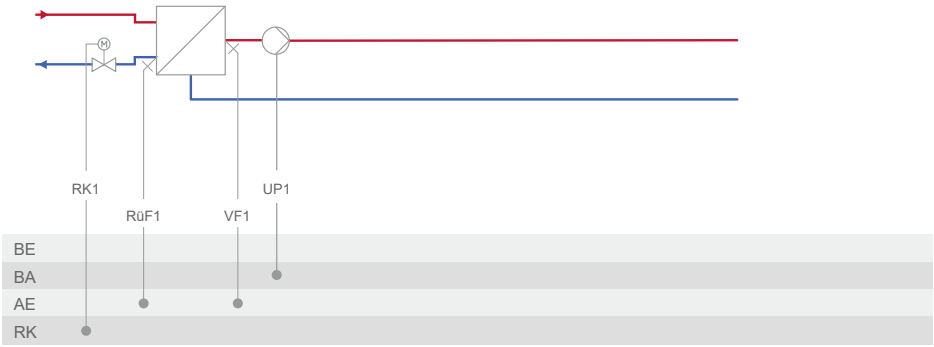

Note:	Closed control circuit and UP1 are only active during the processing for an external demand.
Default settings	
CO1 -> F03	- 1 (with RüF1)
CO5' -> F10	Function of the 0 to 10 V output: – 1 = Control signal RK1 – 6 = External demand When CO1 -> F18 - 1

System Anl 4.0

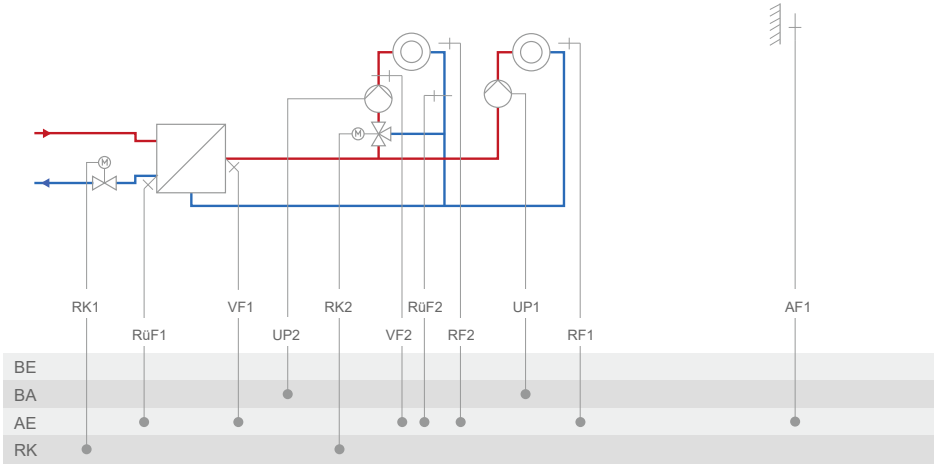

Default setting	
CO1 -> F02	- 0 (without RF1)
CO1 -> F03	- 1 (with AF1)
CO2 -> F01	- 1 (with RüF1)
CO2 -> F02	- 0 (without RF2)
CO2 -> F03	- 1 (with AF1)
CO5 -> F14	- 0 (without RüF2)
CO5' -> F10	Function of the 0 to 10 V output: – 1 = Control signal RK1 – 2 = Control signal RK2 – 6 = External demand — When CO1 -> F18 - 1 – 5 = Outdoor temperature — When CO5 -> F23 - 1 Direction 'AA'

System Anl 4.1

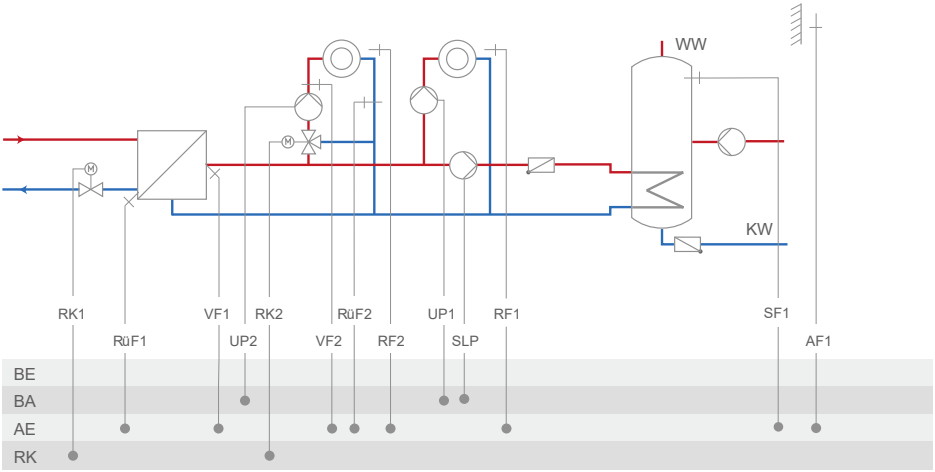

Default setting	
CO1 -> F01	- 0 (without RF1)
CO1 -> F02	- 1 (with AF1)
CO1 -> F03	- 1 (with RüF1)
CO2 -> F01	- 0 (without RF2)
CO2 -> F02	- 1 (with AF1)
CO2 -> F03	- 0 (without RüF2)
CO4 -> F01	- 1 (with SF1)
CO4 -> F02	- 0 (without SF2)
CO5' -> F10	Function of the 0 to 10 V output: – 1 = Control signal RK1 – 2 = Control signal RK2 – 6 = External demand — When CO1 -> F18 - 1 – 7 = SLP speed — When CO4 -> F21 - 1 – 5 = Outdoor temperature — When CO5 -> F23 - 1 Direction 'AA'

System Anl 4.5

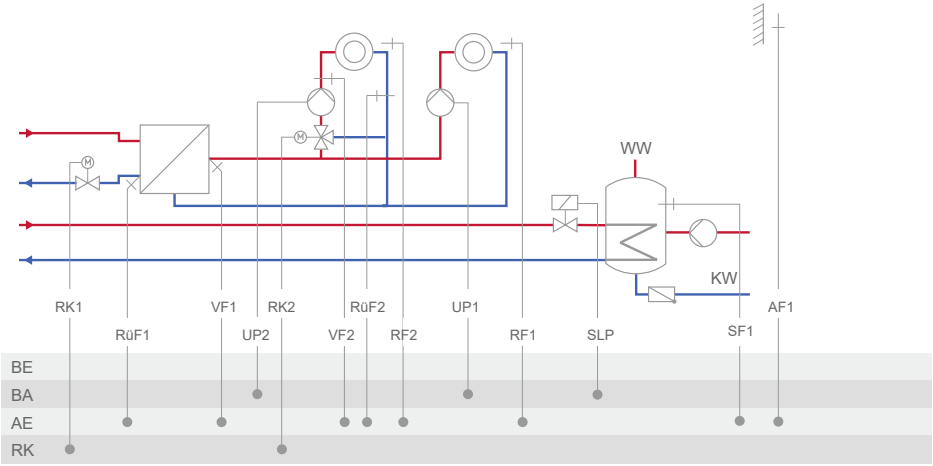

Default setting	
CO1 -> F01	- 0 (without RF1)
CO1 -> F02	- 1 (with AF1)
CO1 -> F03	- 1 (with RüF1)
CO2 -> F01	- 0 (without RF2)
CO2 -> F02	- 1 (with AF1)
CO2 -> F03	- 0 (without RüF2)
CO4 -> F01	- 1 (with SF1)
CO4 -> F02	- 0 (without SF2)
CO5' -> F10	Function of the 0 to 10 V output: – 1 = Control signal RK1 – 2 = Control signal RK2 – 6 = External demand — When CO1 -> F18 - 1 – 5 = Outdoor temperature — When CO5 -> F23 - 1 Direction 'AA'

System Anl 10.0

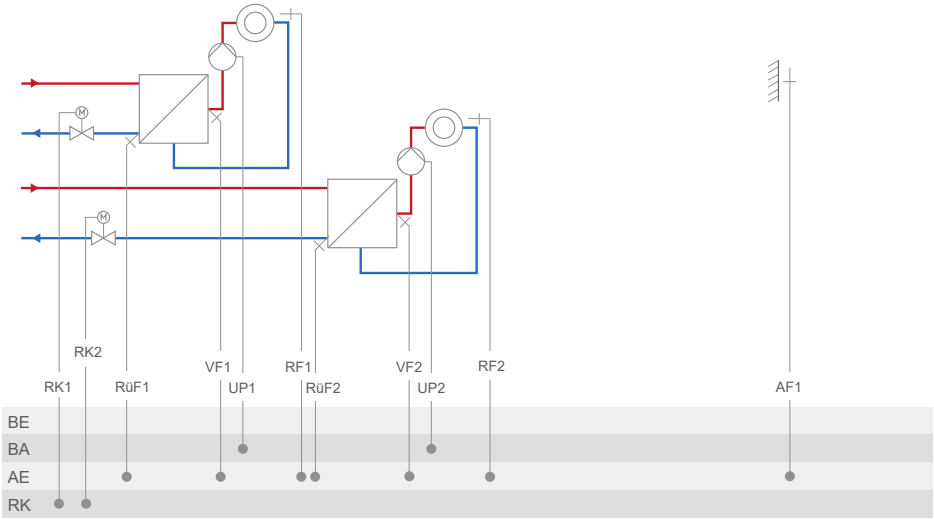

Default setting	
CO1 -> F01	- 0 (without RF1)
CO1 -> F02	- 1 (with AF1)
CO1 -> F03	- 1 (with RüF1)
CO2 -> F01	- 0 (without RF2)
CO2 -> F02	- 1 (with AF1)
CO2 -> F03	- 1 (with RüF2)
CO5' -> F10	Function of the 0 to 10 V output: – 1 = Control signal RK1 – 2 = Control signal RK2 – 6 = External demand — When CO1 -> F18 - 1 – 5 = Outdoor temperature — When CO5 -> F23 - 1 Direction 'AA'

System Anl 11.0

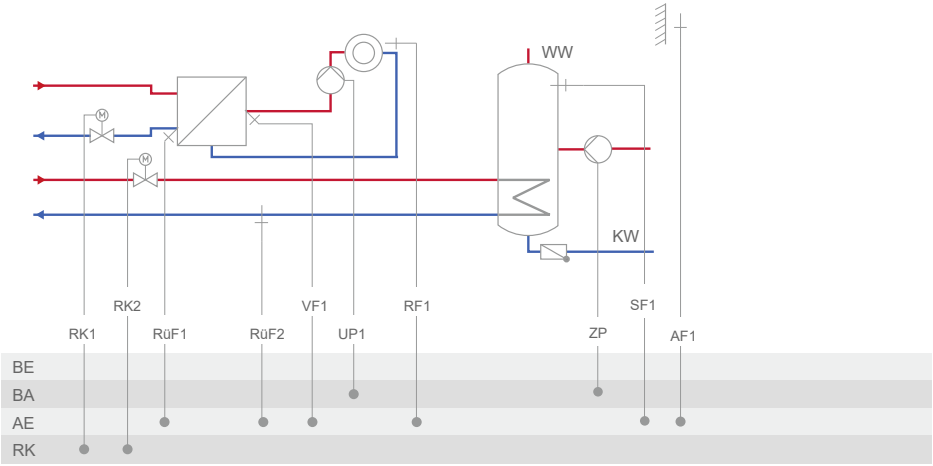

Default setting	
CO1 -> F01	- 0 (without RF1)
CO1 -> F02	- 1 (with AF1)
CO1 -> F03	- 1 (with RüF1)
CO4 -> F03	- 0 (without RüF2)
CO5' -> F10	Function of the 0 to 10 V output: – 1 = Control signal RK1 – 2 = Control signal RK2 – 6 = External demand — When CO1 -> F18 - 1 – 5 = Outdoor temperature — When CO5 -> F23 - 1 Direction 'AA'

System Anl 11.1

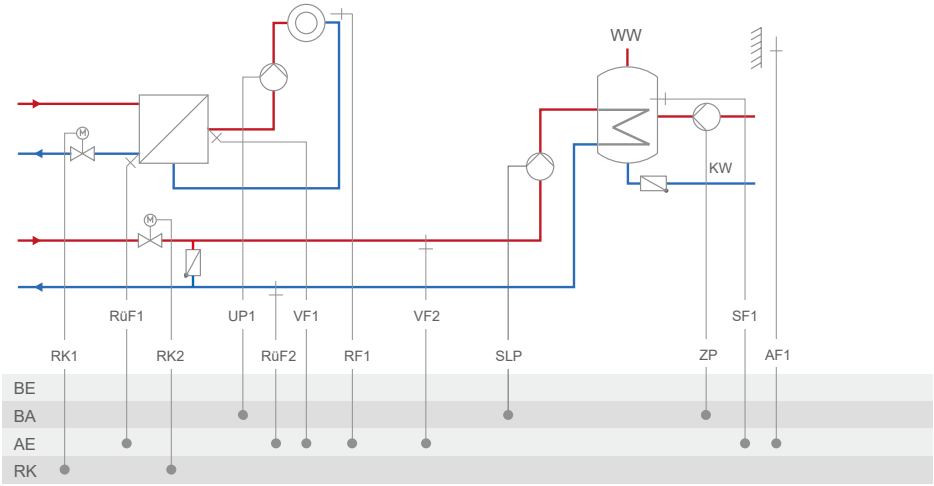

Default setting	
CO1 -> F01	- 0 (without RF1)
CO1 -> F02	- 1 (with AF1)
CO1 -> F03	- 1 (with RüF1)
CO4 -> F01	- 1 (with SF1)
CO4 -> F02	- 0 (without SF2)
CO4 -> F03	- 0 (without RüF2)
CO5' -> F10	Function of the 0 to 10 V output: – 1 = Control signal RK1 – 2 = Control signal RK2 – 6 = External demand — When CO1 -> F18 - 1 – 7 = SLP speed — When CO4 -> F21 - 1 – 5 = Outdoor temperature — When CO5 -> F23 - 1 Direction 'AA'

System Anl 11.1 with buffer storage tank

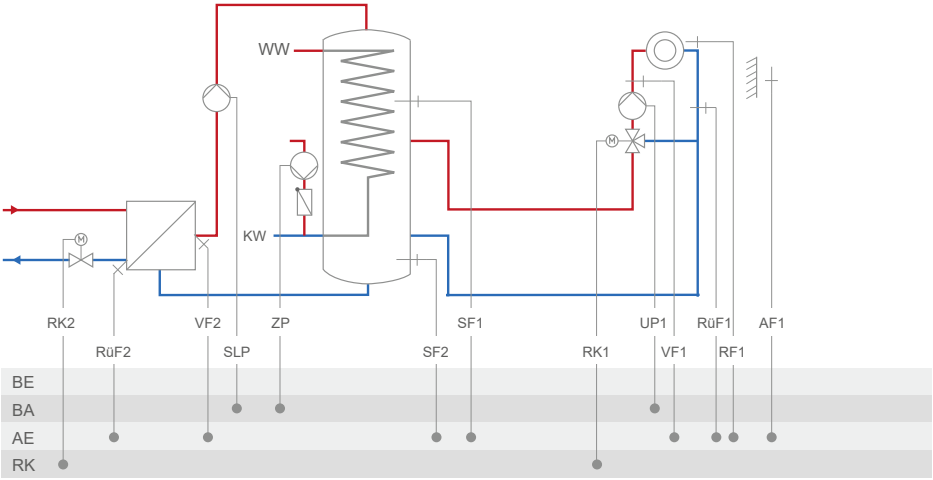

Default setting	
CO1 -> F01	- 0 (without RF1)
CO1 -> F02	- 1 (with AF1)
CO1 -> F03	- 1 (with RüF1)
CO4 -> F01	- 1 (with SF1)
CO4 -> F02	- 0 (without SF2)
CO4 -> F03	- 0 (without RüF2)
CO5' -> F10	Function of the 0 to 10 V output: – 1 = Control signal RK1 – 2 = Control signal RK2 – 6 = External demand — When CO1 -> F18 - 1 – 7 = SLP speed — When CO4 -> F21 - 1 – 5 = Outdoor temperature — When CO5 -> F23 - 1 Direction 'AA'

System Anl 11.2

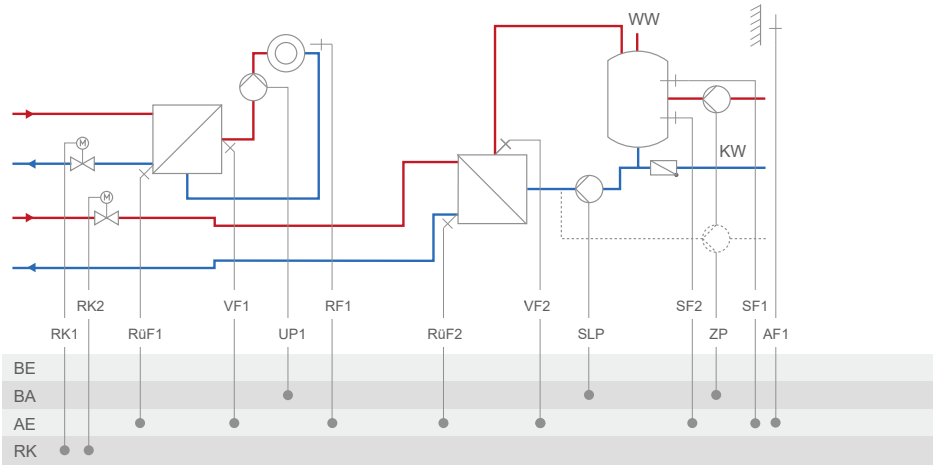

Default setting	
CO1 -> F01	- 0 (without RF1)
CO1 -> F02	- 1 (with AF1)
CO1 -> F03	- 1 (with RüF1)
CO4 -> F01	- 1 (with SF1)
CO4 -> F02	- 1 (with SF2)
CO4 -> F03	- 0 (without RüF2)
CO4 -> F10	- 0 (DHW circulation return flow in storage tank)
CO5' -> F10	Function of the 0 to 10 V output: – 1 = Control signal RK1 – 2 = Control signal RK2 – 6 = External demand — When CO1 -> F18 - 1 – 7 = SLP speed — When CO4 -> F21 - 1 – 5 = Outdoor temperature — When CO5 -> F23 - 1 Direction 'AA'

System Anl 11.2 with buffer storage tank

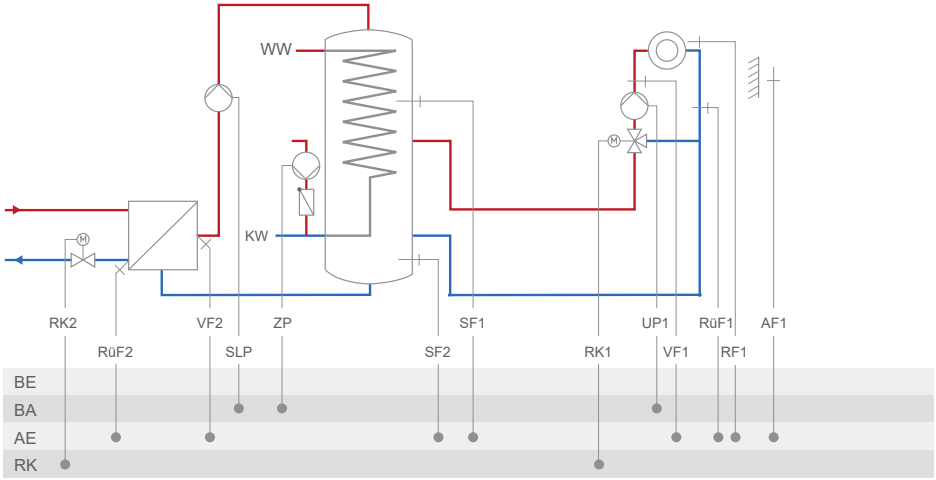

Default setting	
CO1 -> F01	- 0 (without RF1)
CO1 -> F02	- 1 (with AF1)
CO1 -> F03	- 1 (with RüF1)
CO4 -> F01	- 1 (with SF1)
CO4 -> F02	- 1 (with SF2)
CO4 -> F03	- 0 (without RüF2)
CO5' -> F10	Function of the 0 to 10 V output: – 1 = Control signal RK1 – 2 = Control signal RK2 – 6 = External demand — When CO1 -> F18 - 1 – 7 = SLP speed — When CO4 -> F21 - 1 – 5 = Outdoor temperature — When CO5 -> F23 - 1 Direction 'AA'

System Anl 11.5

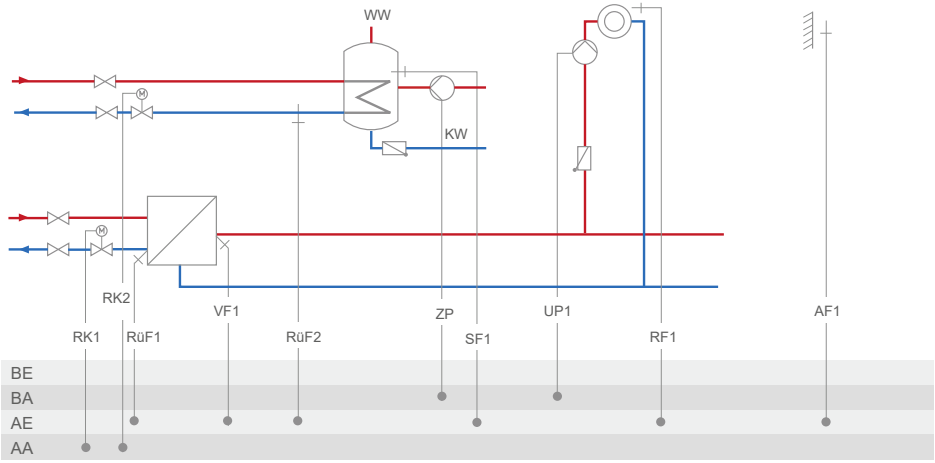

Note:	DHW circuit with adjustable valve position for storage tank charging in absolute priority operation. By using RüF2, the ready-adjusted valve position is subject to the return flow temperature limitation.
Default setting	
CO1 -> F01	- 0 (without RF1)
CO1 -> F02	- 1 (with AF1)
CO4 -> F02	- 0 (without SF2)
CO4 -> F03	- 1 (with RüF2)
CO5' -> F10	Function of the 0 to 10 V output: – 1 = Control signal RK1 – 2 = Control signal RK2 – 6 = External demand — When CO1 -> F18 - 1 – 5 = Outdoor temperature — When CO5 -> F23 - 1 Direction 'AA'

System Anl 11.6

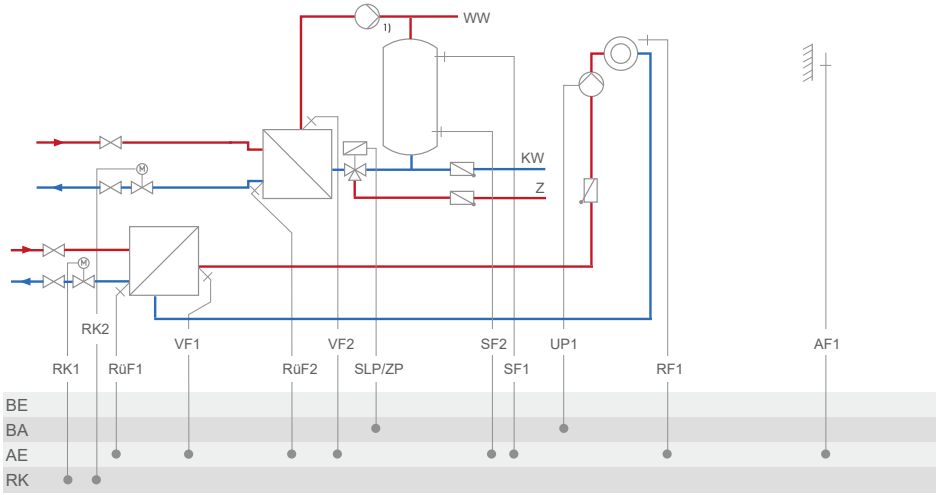

1) Note:	Install a continuously running pump in the DHW circuit and connect it directly to the supply voltage.
Default setting	
CO1 -> F01	- 0 (without RF1)
CO1 -> F02	- 1 (with AF1)
CO1 -> F03	- 1 (with RüF1)
CO4 -> F01	- 1 (with SF1)
CO4 -> F02	- 1 (with SF2)
CO4 -> F03	- 0 (without RüF2)
CO5' -> F10	Function of the 0 to 10 V output: – 1 = Control signal RK1 – 2 = Control signal RK2 – 6 = External demand — When CO1 -> F18 - 1 – 5 = Outdoor temperature — When CO5 -> F23 - 1 Direction 'AA'

System Anl 11.9

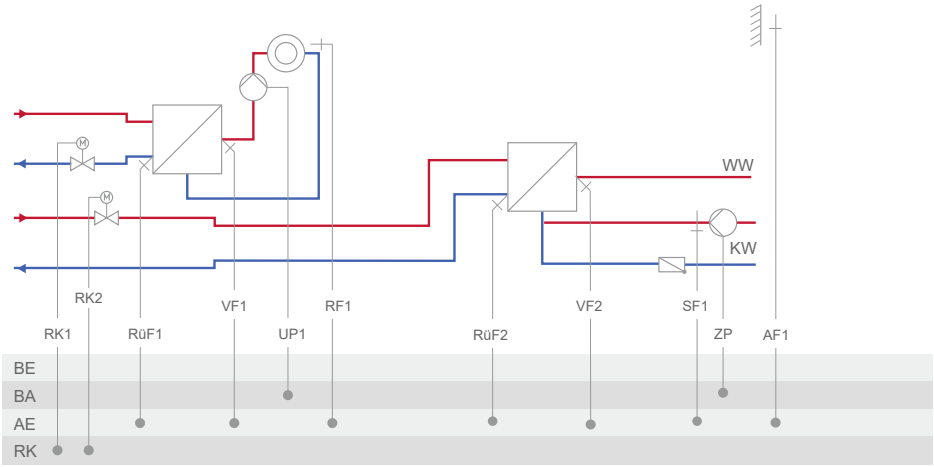

Default setting	
CO1 -> F01	- 0 (without RF1)
CO1 -> F02	- 1 (with AF1)
CO1 -> F03	- 1 (with RüF1)
CO4 -> F01	- 0 (without SF1)
CO4 -> F03	- 0 (without RüF2)
CO5' -> F10	Function of the 0 to 10 V output: – 1 = Control signal RK1 – 2 = Control signal RK2 – 10 V supply – 6 = External demand — When CO1 -> F18 - 1 – 5 = Outdoor temperature — When CO5 -> F23 - 1 Direction 'AA'

System Anl 16.0

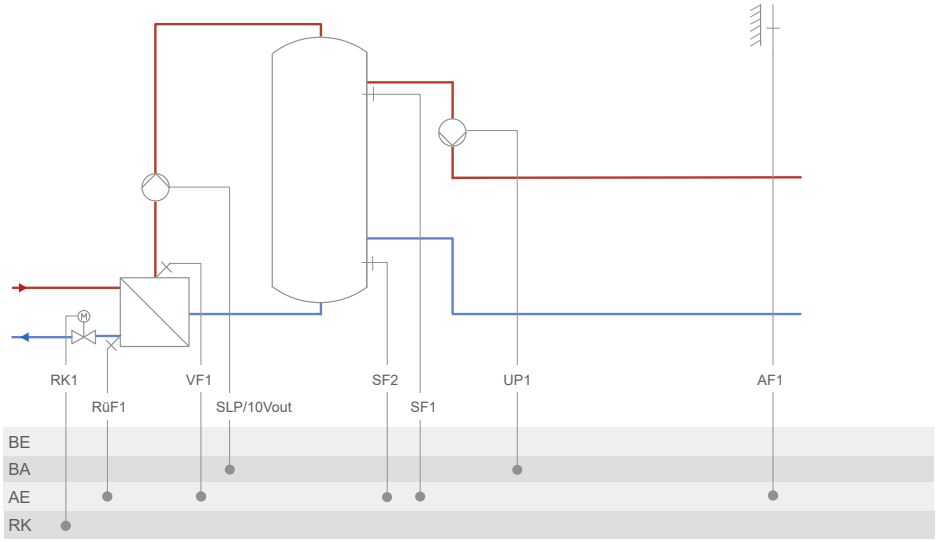

Default setting	
CO1 -> F02	- 1 (with AF1)
CO1 -> F03	- 1 (with RüF1)
CO1 -> F06	- 1 (with SF2)
CO5' -> F10	Function of the 0 to 10 V output: – 1 = Control signal RK1 – 7 = SLP speed — When CO1 -> F21 - 1 – 9 = Differential temperature control — When CO1 -> F23 - 1 – 6 = External demand — When CO1 -> F18 - 1 – 5 = Outdoor temperature — When CO5 -> F23 - 1 Direction 'AA'

System Anl 16.1

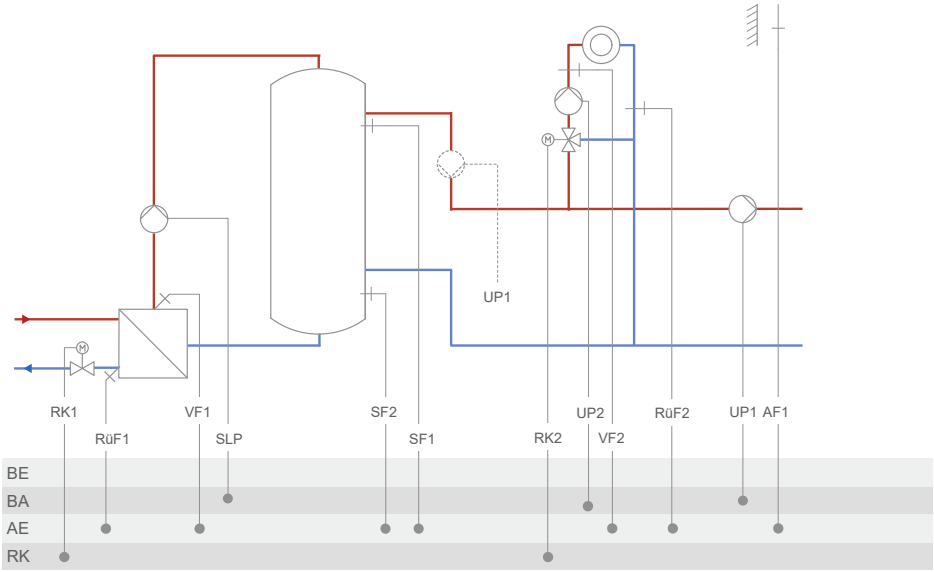

Default setting	
CO1 -> F02	- 1 (with AF1)
CO1 -> F03	- 1 (with RüF1)
CO1 -> F06	- 1 (with SF2)
CO2 -> F02	- 1 (with AF1)
CO2 -> F03	- 0 (without RüF2)
CO5' -> F10	Function of the 0 to 10 V output: – 1 = Control signal RK1 – 2 = Control signal RK2 – 7 = SLP speed — When CO1 -> F21 - 1 – 6 = External demand — When CO1 -> F18 - 1 – 5 = Outdoor temperature — When CO5 -> F23 - 1 Direction 'AA'

System Anl 16.2

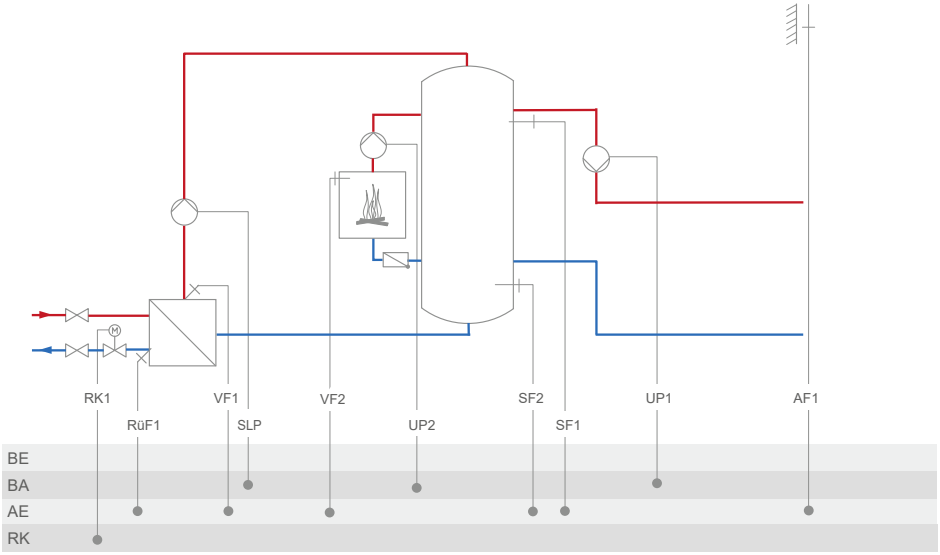

Default setting	
CO1 -> F02	- 1 (with AF1)
CO1 -> F03	- 1 (with RüF1)
CO1 -> F06	- 1 (with SF2)
CO5' -> F10	Function of the 0 to 10 V output: – 1 = Control signal RK1 – 7 = SLP speed — When CO1 -> F21 - 1 – 6 = External demand — When CO1 -> F18 - 1 – 5 = Outdoor temperature — When CO5 -> F23 - 1 Direction 'AA'

System Anl 16.3

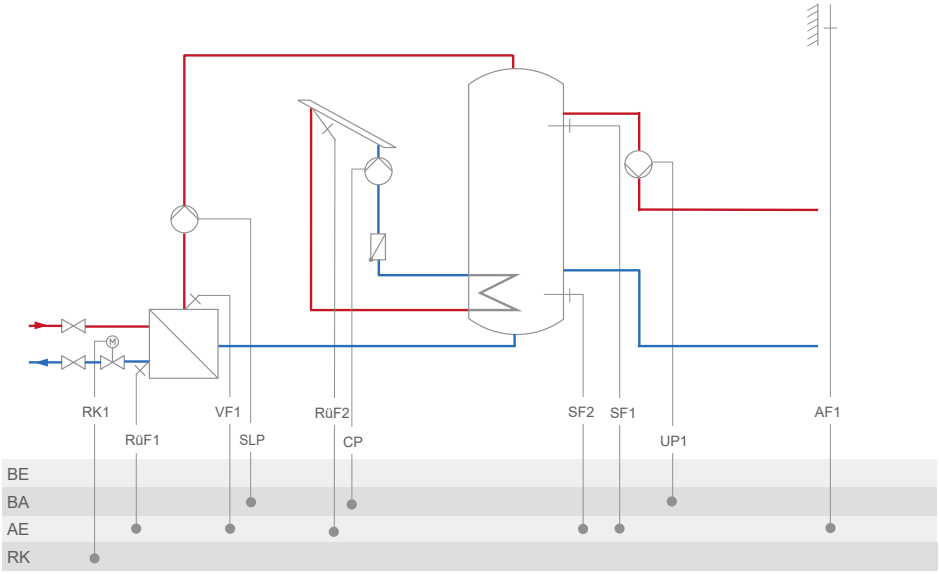

Default setting	
CO1 -> F02	- 1 (with AF1)
CO1 -> F03	- 1 (with RüF1)
CO1 -> F06	- 1 (with SF2)
CO5' -> F10	Function of the 0 to 10 V output: – 1 = Control signal RK1 – 7 = SLP speed — When CO1 -> F21 - 1 – 6 = External demand — When CO1 -> F18 - 1 – 5 = Outdoor temperature — When CO5 -> F23 - 1 Direction 'AA'

System Anl 16.4

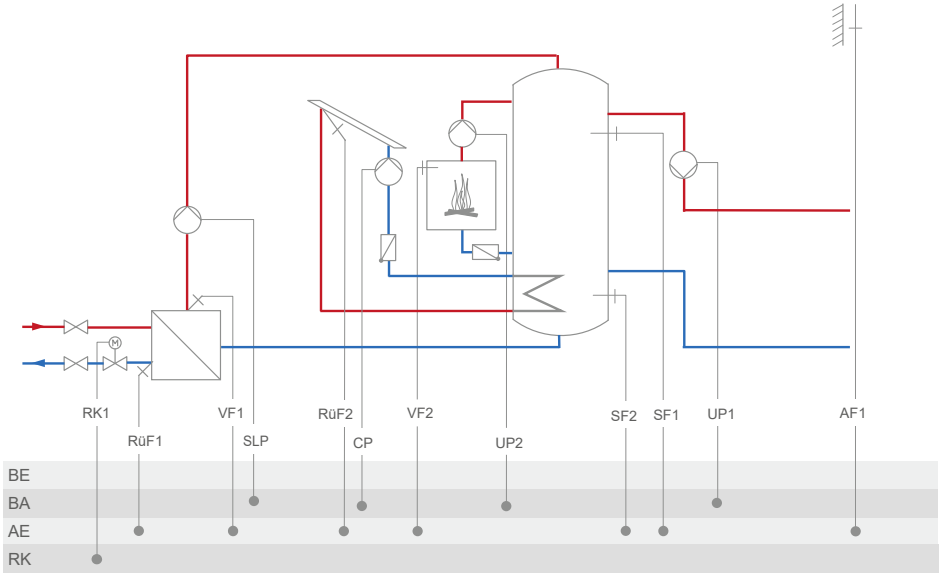

Default setting	
CO1 -> F02	- 1 (with AF1)
CO1 -> F03	- 1 (with RüF1)
CO1 -> F06	- 1 (with SF2)
CO5' -> F10	Function of the 0 to 10 V output: – 1 = Control signal RK1 – 7 = SLP speed — When CO1 -> F21 - 1 – 6 = External demand — When CO1 -> F18 - 1 – 5 = Outdoor temperature — When CO5 -> F23 - 1 Direction 'AA'

System Anl 16.6

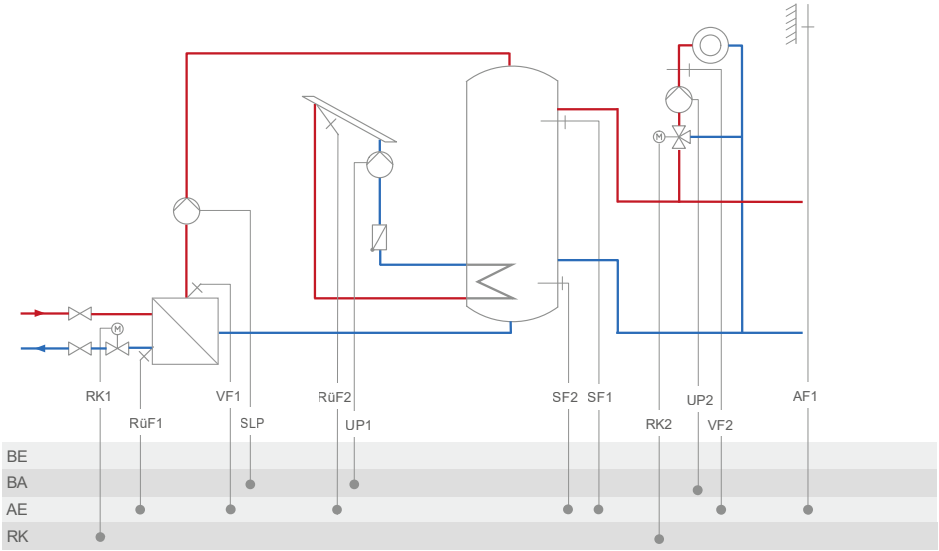

Default setting	
CO1 -> F02	- 1 (with AF1)
CO1 -> F03	- 1 (with RüF1)
CO1 -> F06	- 1 (with SF2)
CO2 -> F02	- 1 (with AF1)
CO2 -> F03	- 0 (without RüF2)
CO5' -> F10	Function of the 0 to 10 V output: – 1 = Control signal RK1 – 2 = Control signal RK2 – 7 = SLP speed — When CO1 -> F21 - 1 – 6 = External demand — When CO1 -> F18 - 1 – 5 = Outdoor temperature — When CO5 -> F23 - 1 Direction 'AA'

16.2 Functions of the heating circuit

Which controller functions are available depends on the selected system code number (Anl).

16.2.1 Outdoor-temperature-compensated control

When outdoor-temperature-compensated control is used, the flow temperature is controlled based on the outdoor temperature. The heating characteristic in the controller defines the flow temperature set point as a function of the outdoor temperature (see Fig. 16-3). The outdoor temperature required for outdoor-temperature-compensated control can either be measured at an outdoor sensor or received over the 0 to 10 V input.

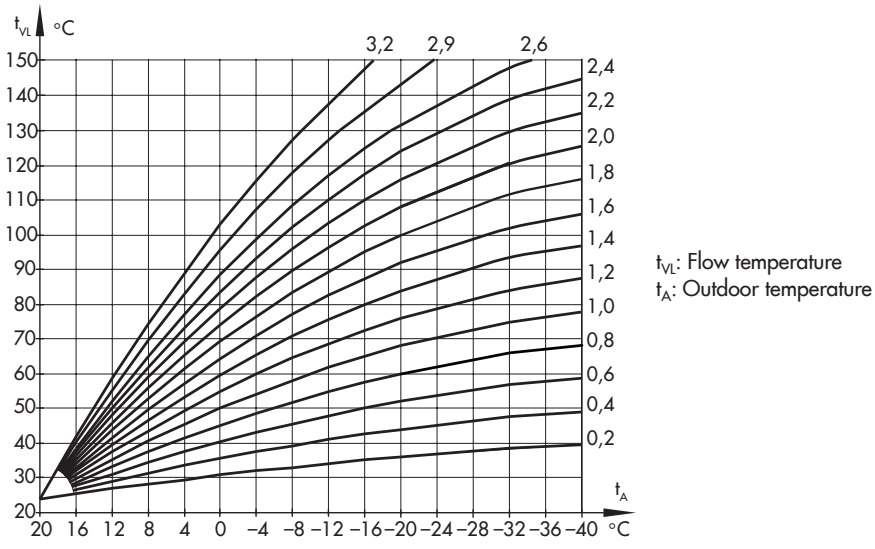

Fig. 16-3: *Gradient characteristics*

16.2.1.1 Outdoor temperature received or sent as 0 to 10 V signal

The outdoor temperature can be received at terminals 11 and 12 as a 0 to 10 V input signal or issued as a 0 to 10 V output signal. The zero of the 0 to 10 V input and output signals can be shifted, if required.

Functions	Default	Configuration
Outdoor sensor AF1	1	CO1.2 -> F02 - 1
Outdoor temperature received or sent as 0 to 10 V signal	0 AE –20 °C +50 °C	CO5 -> F23 - 1 Direction: AE (receive) Lower transmission range: –50 to +100 °C Upper transmission range: –50 to +100 °C
AE (terminals 11/12) zero shift	0 5 %	CO5' -> F07 - 1 Zero: 5 to 20 %
Outdoor temperature received or sent as 0 to 10 V signal	0 AE –20 °C +50 °C	CO5 -> F23 - 1 Direction: AA for sending Lower transmission range: –50 to +100 °C Upper transmission range: –50 to +100 °C
AA (terminals 11/12) reverse	0 0 %	CO5' -> F01 - 0 Zero: 0 to 50 %
AA (terminals 11/12) PWM	0	CO5' -> F10 - 0 Function: 5 = Outdoor temperature

16.2.1.2 Gradient characteristic

Basically, the following rule applies: a decrease in the outdoor temperature causes the flow temperature to increase in order to keep the room temperature constant. By varying the 'Gradient' and 'Level' parameters, you can adapt the characteristic to your individual requirements:

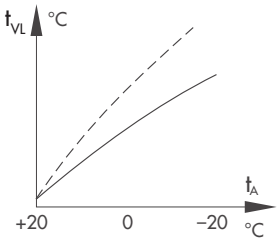

The gradient needs to be increased if the room temperature drops when it is cold outside.

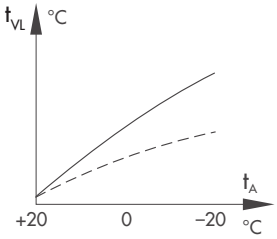

The gradient needs to be decreased if the room temperature drops when it is cold outside.

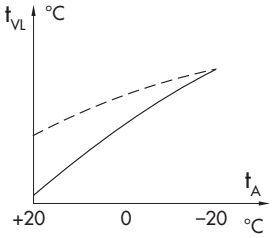

The level needs to be increased and the gradient decreased if the room temperature drops when it is mild outside.

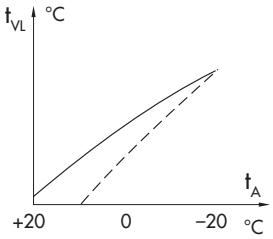

The level needs to be decreased and the gradient increased if the room temperature rises when it is mild outside.

Outside the times-of-use, reduced set points are used for control: the reduced flow set point is calculated as the difference between the adjusted values for 'Day set point' (rated room temperature) and 'Night set point' (reduced room temperature). The 'Max. flow temperature' and 'Min. flow temperature' parameters mark the upper and lower limits of the flow temperature. A separate gradient characteristic can be selected for the limitation of the return flow temperature.

Examples for adjusting the characteristic

- Old building, radiator design 90/70: Gradient approx. 1.8
- New building, radiator design 70/55: Gradient approx. 1.4
- New building, radiator design 55/45: Gradient approx. 1.0
- Underfloor heating depending on arrangement: Gradient smaller than 0.5

i ***Note***

Particularly for control operation without room sensor, the room temperatures set for day ('Day set point') and night ('Night set point') only become effective satisfactorily when the heating characteristic has been adapted to the building/heating surface layout.

Functions	**Default**	**Configuration**
Four-point characteristic	0	CO1, 2 -> F11 - 0
Parameters	**Default**	**Switch position: value range**
Day set point	20.0 °C	☼: 0.0 to 40.0 °C
Night set point	15.0 °C	☾: 0.0 to 40.0 °C
Parameters	**Default**	**Parameter level: value range**
Flow gradient	1.2 [1)]	PA1, 2: 0.2 to 3.2
Flow level	0.0 °C	PA1, 2: –30.0 to +30.0 °C
Min. flow temperature	20.0 °C	PA1, 2: –5.0 to +150.0 °C
Max. flow temperature	70.0 °C [1)]	PA1, 2: 5.0 to 150.0 °C

[1)] With CO1, 2 -> F05-1 the following applies: Flow gradient: 0.2 to 1.0 (0.5)
Max. flow temperature: 5.0 to 50.0 °C (50.0 °C)

16.2.1.3 Four-point characteristic

The four-point characteristic allows you to define your own heating characteristic. It is defined by four points for the outdoor temperature, flow temperature, reduced flow temperature and return flow temperature. The 'Max. flow temperature' and 'Min. flow temperature' parameters mark the upper and lower limits of the flow temperature.

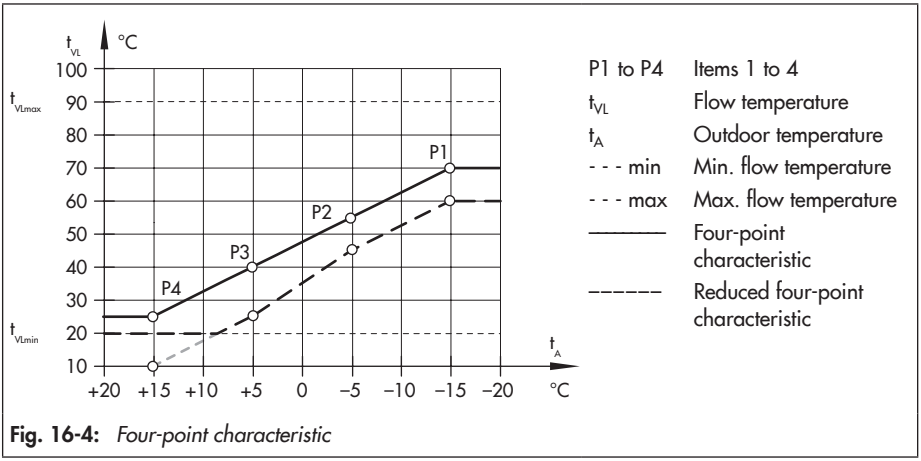

Fig. 16-4: *Four-point characteristic*

i ***Note***

– *The 'Day set point' and 'Night set point' parameters are no longer available when the four-point characteristic has been selected when no additional functions (e.g.* **optimization**, **flash adaptation***) have been selected.*

– *The* **four-point characteristic** *function can only be activated when the* **adaptation** *function is not active (CO1, 2 -> F08 - 0).*

Functions		Default	Configuration
Adaptation		0	CO1, 2 -> F08 - 0
Four-point characteristic		0	CO1, 2 -> F11 - 1
Parameters		**Default**	**Parameter level: value range**
Outdoor temperature	Point 1	−15.0 °C	PA1, 2: −50.0 to +50.0 °C
	Point 2	−5.0 °C	
	Point 3	5.0 °C	
	Point 4	15.0 °C	

Parameters		Default	Parameter level: value range
Flow temperature	Point 1	70.0 °C	PA1, 2: –5.0 to +150.0 °C
	Point 2	55.0 °C	
	Point 3	40.0 °C	
	Point 4	25.0 °C	
Reduced flow temperature	Point 1	60.0 °C	PA1, 2: –5.0 to +150.0 °C
	Point 2	40.0 °C	
	Point 3	20.0 °C	
	Point 4	20.0 °C	
Return flow temperature	Points 1 to 4	65.0 °C	PA1, 2: 5.0 to 90.0 °C
Min. flow temperature		20.0 °C	PA1, 2: –5.0 to +150.0 °C
Max. flow temperature		70.0 °C [1]	PA1, 2: 5.0 to +150.0 °C

[1] With CO1, 2 -> F05-1 the following applies: Max. flow temperature: 5.0 to 50.0 °C (50.0 °C)

16.2.2 Fixed set point control

During the times-of-use, the flow temperature can be controlled according to a fixed set point. Outside the times-of-use, the controller regulates to a reduced flow temperature. Set the desired rated flow temperature as 'Day set point' and the reduced flow temperature as 'Night set point'.

Functions	Default	Configuration
Outdoor sensor AF1	1	CO1.2 -> F02 - 0

Parameters	Default	Switch position: value range
Day set point	50.0 °C	☼: Min. to max. flow temperature
Night set point	30.0 °C	☾: Min. to max. flow temperature

Parameters	Default	Parameter level: value range
Min. flow temperature	20.0 °C	PA1, 2: –5.0 to +150.0 °C
Max. flow temperature	70.0 °C	PA1, 2: 5.0 to 150.0 °C

16.2.3 Underfloor heating/drying of jointless floors

Using function block setting CO1, 2 -> F05 - 1, the respective heating circuit is configured as an underfloor heating circuit. In doing so, the controller at first only limits the value ranges of the heating characteristic gradient and the maximum flow temperature in PA1, 2 parameter levels:

– Value range of the gradient: 0.2 to 1.0
– Value range of the maximum flow temperature: 5 to 50 °C

Furthermore, it is possible to set a Boost between 0.0 to 50.0 °C, which is additionally taken into account when there is a heat demand for the underfloor heating circuit of an upstream control circuit. The **Drying of jointless floors** function can be activated afterwards. The function block parameters (starting with the 'Start temperature') determine the drying process: the first heating up phase starts at the entered 'Start temperature', which has a flow temperature of 25 °C in its default setting. The start temperature is held constant for the days entered in 'Hold (days)'. Afterwards, this temperature is raised by the value entered in 'Temp. rise/day' within 24 hours, i.e. the default setting causes the flow temperature set point to rise to 30 °C 24 hours after the holding phase. If the 'Maximum temperature' is reached, it is kept constant for the number of days entered in 'Max. temperature sustaining time'. The 'Temp. reduction/day' parameter determines the temperature reduction downwards. If the 'Temp. reduction/day' is set to 0, the temperature maintaining phase moves directly to automatic mode. If the function block parameter 'Start temperature' is set to 25 °C and 'Temp. rise/day' to 0.0 °C, the drying functions runs as specified in Part 4 of DIN EN 1264: the drying of jointless floors function starts with a flow temperature of 25 °C, which is kept constant for three days. Afterwards, the controller switches to the maximum adjusted temperature. The further process remains unchanged. The drying of jointless floors function is activated by changing the default setting 'STOP' to 'START' (display: ▪START). The restarting phases 'START temperature build-up phase' (display: ▪▪START), 'START maximum temperature hold phase' (display:▪▪▪START) and 'START temperature reduction phase' (reading:▪▪▪▪START) can be selected to continue an interrupted drying process. The course of the drying process can be monitored in the operating level in the reading of the flow temperature reading (↑) of the associated heating circuit. For example:

Maximum temperature hold phase

When the additional reading in the flow temperature reading disappears after the last phase, this indicates that the drying process has been completed. Any power failure that occurs while the function is running automatically restarts the drying function.

In systems in which the drying function had to be interrupted due to DHW heating (e.g. system Anl 2.1, see page 16-12), storage tank charging does not occur while the drying function is active, provided it is not used for frost protection of the storage tank.

i ***Note***

The function block parameters can only be accessed after after starting the function by deactivating and activating the function block again.

Functions	Default	Configuration
Underfloor heating/drying of jointless floors	0	CO1, 2 -> F05 - 1
	0.0 °C	Boost: 0.0 to 50.0 °C
	25.0 °C	Start temperature: 20.0 to 60.0 °C
	0	Hold (days): 0 to 10 days
	5.0 °C	Temp. rise/day: 0.0 to 10.0 °C
	45.0 °C	Maximum temperature: 25.0 to 60.0 °C
	4	Hold (days): 0 to 10 days
	0.0 °C	Temp. reduction/day: 0.0 to 10.0 °C
	SToP	▪STArT, ▪▪STArT, ▪▪▪STArT, ▪▪▪▪STArT

16.2.4 Night set-back

The night set-back (= difference of the flow target temperature in rated and reduced mode) is calculated in all heating circuits with a gradient characteristic as follows:

2x Heating characteristic gradient x (day room temperature – night room temperature)

16.2.4.1 OT activation value in rated operation

If a heating circuit is in reduced operation (automatic mode), this circuit is switched to rated operation whenever the outdoor temperature falls below 'OT activation value in rated operation'. Reduced operation restarts after the outdoor temperature rises above the limit (plus 0.5 °C hysteresis).

This function prevents the building from cooling down excessively outside the times-of-use when low outdoor temperatures occur. The transition towards rated mode can be configured to be variable depending on the outdoor temperature.

Parameters	Default	Parameters: value range
OT activation value in rated operation	–15.0 °C	PA1, 2: –50.0 to +5.0 °C (only when CO1', CO2' -> F04 - 0)

16.2.4.2 OT deactivation value in rated operation

The associated heating circuit is immediately switched off when the outdoor temperature exceeds the limit 'OT deactivation value in rated operation'. The valve is closed and the pump is switched off after t = 2 x Valve transit time. The heating is immediately switched on again when the outdoor temperature falls below the limit (minus 0.5 °C hysteresis).

The default setting causes the system to be switched off during warm weather at an outdoor temperature of 22 °C.

Parameters	Default	Parameter level: configuration
OT deactivation value in rated operation	22.0 °C	PA1, 2: 0.0 to 50.0 °C

16.2.4.3 OT deactivation value in reduced operation

The associated heating circuit is immediately switched off when the outdoor temperature exceeds the limit 'OT deactivation value in reduced operation'. The valve is closed and the pump is switched off after t = 2 x Valve transit time. The heating is immediately switched on again when the outdoor temperature falls below the limit (minus 0.5 °C hysteresis).

The default setting causes the system to be switched off at night time at an outdoor temperature of 15 °C to save energy. However, be aware when this setting is used that the system takes awhile in the morning to warm up the building.

Parameters	Default	Parameter level: configuration
OT deactivation value in reduced operation	15.0 °C	PA1, 2: –50.0 to +50.0 °C

16.2.4.4 Variable night set-back

With the setting CO1', CO2' -> F04 - 1, the night set-back is variable based on the outdoor temperature. The night set-back is fully effective at outdoor temperatures above the outdoor temperature limit value 'OTL night 100 %'.

The absolute value of the night set-back is linearly reduced to zero in the range between this value and the outdoor temperature limit value 'OTL night 0 %' for continuous day mode.

With the setting CO1', CO2'->F04-1, the 'OT activation value in rated operation' parameter is not used in the corresponding PA level.

Functions	Default	Configuration
Variable night set-back	0	CO1', CO2' -> F04 - 1 (only when CO1, CO2 -> F11 - 0)
	5.0 °C	OTL night 100 %: –50 °C to 20.0 °C
	–15 °C	OTL day 0 %: –50 °C to +5.0 °C

16.2.5 Buffer tank systems Anl 16.x

A heating characteristic based on a gradient or four entered points can be set in PA1 for the buffer tanks in systems Anl 16.x. A buffer tank set point for day operation and a buffer tank set point for night operation can be set without outdoor sensors in the customer level. An external demand transmitted from secondary controlled heating circuits, DHW circuit or an external request (over a 0 to 10 V or binary signal) can override the current buffer tank set point. The maximum demand is indicated as the buffer tank set point for SF1. If the temperature falls below the buffer tank set point at SF1, charging of the buffer tank is started.

The set point of the charging temperature is determined by the 'Minimum set point to charge buffer tank' parameter setting in the PA1 level. The automatic adaptation ('OT' setting) causes the set point of the charging temperature to always be above the current buffer tank set point by the value entered in 'Charging temperature boost'. Every other value entered in 'Minimum set point to charge buffer tank' is used as the minimum set point for the charging temperature which first starts to be variable at higher buffer tank set points. When a return flow temperature sensor RüF1 is used, the charging pump SLP (CO1 -> F22 - 1) is first released to avoid cold charging when the temperature measured at RüF1 has reached the same temperature measured at SF1. An activated setting CO1' -> F03 - 1 (discharging protection) causes the charging to be stopped when the charging temperature does not reach its set point even though the valve is fully open or it falls below the temperature measured at SF1 and does not rise again. Charging with the valve fully open is stopped after one hour at the latest.

The CO1' -> F03 - 1 setting causes a 2 °C higher charging set point to be calculated. The following then applies:

Charging set point = Set point at SF1 + 'Charging temperature boost' + 2 °C

The 'Stop charging of the buffer tank' parameter (PA1, default = OT) determines under which conditions the charging of the buffer tank is stopped. The automatic adaptation ('AT' setting) causes the buffer tank charging to be stopped when the temperature in the buffer tank reach-

es the value ('Buffer tank set point' + 'Hysteresis of buffer tank'. Every other value entered for 'Stop charging of the buffer tank' is rated as a fixed switch-off temperature for the buffer tank charging. When SF2 (CO1 -> F06 - 1) is configured, SF2 is always used to stop the charging of the buffer tank. In the event that the temperature falls below the buffer tank set point at SF1 while the temperature measured at SF2 is still greater than the value entered for 'Stop charging of the buffer tank', charging does not start until the temperature is 3 °C lower than the buffer tank set point at SF1.

The storage tank charging pump is not switched off until the lag time (entered 'Valve transit time Ty' for Rk1 multiplied by 'Lag time of charging pump') has elapsed. The operation of the feeder pump UP1 is either determined by the ZP time schedule or prompted over an external demand. For systems with downstream control circuits, either only this external demand or the demand of the downstream control circuits causes the feeder pump UP1 to be activated, depending on the CO5 -> F14 setting.
The pump UP2 of the solid fuel boiler circuit in systems Anl 16.2 and 16.4 starts to run when the temperature reaches 'Start temperature for boiler pump' at VF2. The boiler pump is switched off again when the temperature at VF2 falls below the temperature T = 'Start temperature for boiler pump' – 'Boiler pump hysteresis'.
In systems Anl 16.3, 16.4 and 16.6, a solar circuit is integrated, which uses sensor SF2 for control. The collector circuit pump CP is activated when the temperature at the collector sensor RüF2 is higher than that at storage tank sensor SF2 by the value entered in 'Solar circuit pump ON'. It is deactivated when the temperature difference falls below the valve entered in 'Solar circuit pump OFF', when the temperature at the storage tank sensor SF2 reaches 'Max. storage tank temperature' or when the collector temperature rises above 120 °C.

The temperature-based adaptation of the delivery rate of the charging pump SLP can be implemented using a 0 to 10 V signal. It can be reversed, if required.

Functions	Default	Configuration
Storage tank sensor SF2	1	CO1 -> F06 - 1
SLP depending on return flow temperature	0	CO1 -> F22 - 1
Discharging protection	0	CO1' -> F03 - 1
Speed control of the charging pump	0	CO1 -> F21 - 1
	40.0 °C	Start speed reduction SF2 limit: 5.0 to 90.0 °C
	50.0 °C	Stop speed reduction SF2 limit: 5.0 to 90.0 °C
	20.0 °C	Minimum speed: 0 to 50 %

Functions	Default	Configuration
AA (terminals 11/12) reverse	0 0 %	CO5' -> F01 - 1 Zero: 0 to 50 %
AA (terminals 11/12) PWM	0	CO5' -> F10 - 0 (TROVIS 5573 cannot process a PWM signal) 7 = SLP speed

Parameters	Default	Parameter level: value range
Minimum set point to charge buffer tank	AT	PA1: AT to 90.0 °C
Stop charging of the buffer tank	AT	PA1: AT to 90.0 °C
Charging temperature boost	6.0 °C	PA1: 0.0 to 50.0 °C
Lag time of charging pump	1.0	PA1: 0.0 to 10.0 °C
Solar circuit pump ON	10 °C	PA4: 1.0 to 30.0 °C
Solar circuit pump OFF	3.0 °C	PA4: 0.0 to 30.0 °C
Max. storage tank temperature	80 °C	PA4: 20.0 to 90.0 °C
Start temperature for boiler pump	60 °C	PA5: 20.0 to 90.0 °C
Boiler pump hysteresis	5.0 °C	PA5: 0.0 to 30.0 °C

16.2.6 Summer mode

Summer mode is activated depending on the mean daytime temperature (measured between 7.00 and 22.00 h) during the adjusted period.

If the mean daytime temperature exceeds the 'Outdoor temperature limit for summer mode' on the n number of successive days, summer mode is activated on the following day. This means that the valves in all heating circuits are closed and the circulation pumps are switched off after t = 2 x 'Valve transit time'. If the mean daytime temperature falls below the 'Outdoor temperature limit for summer mode' on the m number of successive days, summer mode is deactivated on the following day.

Functions	Default	Configuration
Summer mode	0 01.06 2 30.09 1 18.0 °C	CO5 -> F04 - 1 Start date for summer mode: 01.01 to 31.12 No. days until activation (n): 1 to 3 End date for summer mode: 01.01 to 31.12. No. days until deactivation (m): 1 to 3 Outdoor temperature limit for summer mode: 0.0 to 30.0 °C

i ***Note***

Summer mode only becomes effective when the controller is in automatic mode (🕘).

16.2.7 Delayed outdoor temperature adaptation

The calculated outdoor temperature is used to determine the flow temperature set point. The heat response is delayed when the outdoor temperature either increases or decreases or both. If the outdoor temperature varies by, for example 12 °C within a very short period of time, the calculated outdoor temperature is adapted to the actual outdoor temperature in small steps ('Delay per hour' of 3 °C/h) over a time period of $t = \frac{12\,°C}{3\,°C/h} = 4\ h$.

i ***Note***

The delayed outdoor temperature adaptation helps avoid unnecessary overloads of central heating stations in combination with either overheated buildings occurring, for example due to warm winds or temporarily insufficient heating due to the outdoor sensor being exposed to direct sunshine.
In the information level, the outdoor temperature blinks on the display while delayed outdoor temperature adaptation is active. The calculated outdoor temperature is displayed.

Functions	Default	Configuration
Delayed outdoor temperature adaptation as the temperature falls	0	CO5 -> F05 - 1
Delayed outdoor temperature adaptation as the temperature rises	0	CO5 -> F06 - 1
	3.0 °C	Delay per hour: 0.2 to 6.0 °C

16.2.8 Remote operation

Apart from measuring the room temperature, the Types 5257-5 [1] and Type 5257-51 Room Panels (Pt1000 sensor) as well as Type 5244 [1] Room Panel (PTC sensor) provide the following opportunities of influencing the control process:

Selecting the operating mode:	◴ Automatic mode ☼ Day mode ☾ Night mode
Set point correction:	During rated operation, the room temperature set point can be increased or reduced by up to 5 °C using a continuously adjustable rotary knob.

[1] No longer available

With an activated room sensor, the measured room temperature is displayed when the remote operation is connected and activated. Nevertheless, it is not used for control when either the **optimization**, **adaptation** or **flash adaptation** function is activated.

Functions	Default	Configuration
Room sensor RF1/RF2	0	CO1, 2 -> F01 - 1

16.2.9 Optimization

This function requires the use of a room sensor. Depending on the building characteristics, the controller determines and adapts the required advance heating time (maximum 8 hours) to ensure that the desired 'Day set point' (rated room temperature) has been reached in the reference room when the time-of-use starts. During the advance heating period, the controller heats with the max. flow temperature. This temperature is built up in steps of 10 °C. As soon as the 'Day set point' has been reached, outdoor-temperature-compensated control is activated.

Depending on the room sensor, the controller switches off the heating system up to one hour before the time-of-use ends. The controller chooses the deactivation time such that the room temperature does not drop significantly below the desired value until the time-of-use ends.

During the advance heating period and the premature deactivation of the heating system, the ☼ or ☾ icon blinks on the display.

Outside the times-of-use, the controller monitors the 'Night set point' (reduced room temperature). When the temperature falls below the night set point, the controller heats with the max. flow temperature until the measured room temperature exceeds the adjusted value by 1 °C.

i ***Note***

– Direct sunshine can cause the room temperature to increase and thus result in the premature deactivation of the heating system.
– When the room temperature decreases while the heating system is shortly outside its times-of-use, this can prematurely cause the controller to heat up to the 'Day set point'.

Functions	Default	Configuration
Room sensor RF1/RF2	0	CO1, 2 -> F01 - 1
Outdoor sensor AF1	1	CO1, 2 -> F02 - 1
Optimization	0	CO1, 2 -> F07 - 1
Parameters	**Default**	**Switch position: value range**
Day set point	20.0 °C	🌡☼: 0.0 to 40.0 °C
Night set point	15.0 °C	🌡☾: 0.0 to 40.0 °C

16.2.10 Flash adaptation

To ensure that the controller reacts immediately to room temperature deviations during rated or reduced operation, the function block setting CO1, 2 -> F09 - 1 needs to be made. The heating is then always switched off as soon as the room temperature exceeds the 'Day set point' or 'Night set point' by 2 °C.

Heating first starts again when the room has cooled off and the room temperature is 1 °C above the 'Set point'. The flow temperature set point is corrected if the 'Cycle time' or 'Gain KP' are set to a value other than 0. The 'Cycle time' determines the intervals at which the flow temperature set point is corrected by 1 °C. A 'Gain KP' set to a value other than 0 causes a direct increase/decrease in flow temperature set point when a sudden deviation in room temperature arises. We recommend a 'Gain KP' setting of 10.0.

i ***Note***

– Cooling loads, such as drafts or open windows, affect the control process.
– Rooms may be temporarily overheated after the cooling load has been eliminated.

Functions	Default	Configuration
Room sensor RF1/RF2	0	CO1, 2 -> F01 - 1
Flash adaptation	0 20 min 0.0	CO1, 2 -> F09 - 1 Cycle time: 0 to 100 min KP (gain): 0.0 to 25.0
Parameters	**Default**	**Switch position: value range**
Day set point	20.0 °C	☼: 0.0 to 40.0 °C
Night set point	15.0 °C	☾: 0.0 to 40.0 °C

16.2.11 Flash adaptation without outdoor sensor (based on room temperature)

The flow temperature control starts with 'Day set point' for flow in rated operation or with 'Night set point' for flow in reduced operation as no set points calculated using characteristics exist without an outdoor sensor. The 'Cycle time' determines the intervals at which the flow temperature set point is corrected by 1 °C. The heating is then always switched off as soon as the room temperature exceeds the 'Day set point' or 'Night set point' by 2 °C. Heating first starts again when the room has cooled off and the room temperature is 1 °C above the set point. A 'Gain KP' set to a value other than 0 causes a direct increase/decrease in flow temperature set point when a sudden deviation in room temperature arises. We recommend a 'Gain KP' setting of 10.0.

Functions	Default	Configuration
Room sensor RF1/RF2	0	CO1, 2 -> F01 - 1
Outdoor sensor AF1	1	CO1, 2 -> F02 - 0
Flash adaptation	0 20 min 0.0	CO1, 2 -> F09 - 1 Cycle time: 1 to 100 min KP (gain): 0.0 to 25.0
Parameters	**Default**	**Switch position: value range**
Day set point	20.0 °C	☼: 0.0 to 40.0 °C
Night set point	15.0 °C	☾: 0.0 to 40.0 °C
Parameters	**Default**	**Parameter level: value range**
Flow set point, day	50.0 °C	PA1, 2: –5.0 to +150.0 °C
Flow set point, night	30.0 °C	PA1, 2: –5.0 to +150.0 °C

16.2.12 Adaptation

The controller is capable of automatically adapting the heating characteristic to the building characteristics. A gradient characteristic must be set in this case (CO1, 2 -> F11 - 0). The reference room, where the room sensor is located, represents the entire building and is monitored to ensure that the room set point ('Day set point') is maintained. When the mean measured room temperature in rated operation deviates from the adjusted set point, the heating characteristic is modified accordingly for the following time-of-use. The corrected value is displayed in PA1, 2 (Flow gradient).

Functions	Default	Configuration
Room sensor RF1/RF2	0	CO1, 2 -> F01 - 1
Outdoor sensor AF1	1	CO1, 2 -> F02 - 1
Adaptation	0	CO1, 2 -> F08 - 1
Four-point characteristic	0	CO1, 2 -> F11 - 0
Parameters	**Default**	**Switch position: value range**
Day set point	20.0 °C	🌡☼: 0.0 to 40.0 °C
Night set point	15.0 °C	🌡☾: 0.0 to 40.0 °C

i ***Note***

*If the **Flash adaptation** function is already configured with a small cycle time, the **Adaptation** function should not be configured as well.*

16.2.13 Cooling control

Cooling control with outdoor sensor

When the cooling control function is activated in a control circuit with outdoor sensor, the four-point characteristic of the corresponding control circuit is automatically activated and the operating direction of the control output is reversed. In PA1 and/or PA2 the four points for the course of the set point based on the outdoor temperatures can be adjusted separately for day and night mode. The 'Base point for return flow temperature' that can be adjusted with an active return flow sensor determines the point at which a minimum limitation of the return flow temperature starts: if the measured return flow temperature falls below this value, the flow temperature set point is raised. The four return flow temperature values in the four-point characteristic function have no effect.

Functions		Default	Configuration
Cooling control		0	CO1, 2 -> F04 - 1
Four-point characteristic		0	CO1, 2 -> F11 - 1
Parameters		**Default**	**Parameter level: value range**
Outdoor temperature	Point 1	5.0 °C	PA1, 2: –50.0 to +50.0 °C
	Point 2	15.0 °C	
	Point 3	25.0 °C	
	Point 4	30.0 °C	
Flow temperature	Point 1	20.0 °C	PA1, 2: –5.0 to +150.0 °C
	Point 2	15.0 °C	
	Point 3	10.0 °C	
	Point 4	5.0 °C	
Reduced flow temperature	Point 1	30.0 °C	PA1, 2: –5.0 to +150.0 °C
	Point 2	25.0 °C	
	Point 3	20.0 °C	
	Point 4	15.0 °C	
Base point for return flow temperature:		65.0 °C	PA1, 2: 5.0 to 90.0 °C

i ***Note***

The limiting factors of the **return flow sensor RüF1/RüF2** *(CO1, 2 -> F03) functions apply during cooling control as well.*

Cooling control without outdoor sensor

When the cooling control function is activated in a control circuit without outdoor sensor, only the adjustment limits for the day and night set points at the rotary switch as well as the 'Base point for return flow temperature' can be adjusted in PA1 and/or PA2.

Functions	Default	Configuration
Outdoor sensor AF1		CO1, 2 -> F01 - 0
Cooling control	0	CO1, 2 -> F04 - 1
Parameters	**Default**	**Switch position: value range**
Day set point	20.0 °C	☼: –5.0 to +150.0 °C
Night set point	15.0 °C	☾: –5.0 to +150.0 °C

Parameters	Default	Parameter level: value range
Min. flow temperature	20.0 °C	PA1, 2: –5.0 to +150.0 °C
Max. flow temperature	70.0 °C	PA1, 2: 5.0 to 150.0 °C
Base point for return flow temperature:	65.0 °C	PA1, 2: 5.0 to 90.0 °C

i ***Note***

– *The limiting factors of the* **return flow sensor RüF1/RüF2** *(CO1, 2 -> F03) functions apply during cooling control as well.*
– *The request for a signal by downstream control circuits or externally (when a pre-control circuit is used) is based on the maximum selection. Therefore, systems (e.g. system Anl 3.0) or systems in which the demand is requested using a 0 to 10 V signal are not suitable for transmitting the signal for required cooling. The 'Set point boost (pre-control circuit)' parameter can only generate higher and not lower set points in the pre-control circuit.*

16.2.14 Differential temperature control

In systems Anl 1.0 and 16.0, the differential temperature control causes the delivery rate of pump UP1 to be adapted through the 0 to 10 V output depending on the difference between the secondary flow temperature and the secondary return flow temperature. In system Anl 1.0 the sensor input RüF2 is automatically activated for this purpose with the setting CO1 -> F23 - 1. In system Anl 16.0, the sensor inputs VF2 and RüF2 are automatically activated. The KP (influence factor) determines how strongly the controller responds when the temperature deviates from the set point of the differential temperature control.

Functions	Default	Configuration
Differential temperature control	0 20.0 °C 1.0 20 %	CO1 -> F23 - 1 Set point of differential temperature control: 0.0 to 50.0 °C KP (influence factor): 0.1 to 10.0 Minimum speed: 0 to 100 %
AA (terminals 11/12) reverse	0 0 %	CO5' -> F01 - 1 Zero: 0 to 50 %
AA (terminals 11/12) PWM	0	CO5' -> F10 - 0 (TROVIS 5573 cannot process a PWM signal) Function: 9 = Differential temperature control

16.3 Functions of the DHW circuit

16.3.1 DHW heating in the storage tank system

Start storage tank charging

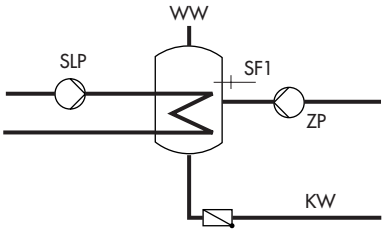

SLP	Storage tank charging pump
SF1	Storage tank sensor
ZP	Circulation pump (DHW)
WW	Hot water
KW	Cold water

Fig. 16-5: *Schematics of a storage tank system*

The controller begins charging the storage tank when the water temperature measured at sensor SF1 falls below the 'DHW temperature set point' by 0.1 °C. If the flow temperature in the system exceeds the desired charging temperature, the controller tries to reduce the flow temperature in the heating circuit for up to three minutes before the storage tank charging pump is activated. When there is no heating operation or when the flow temperature in the system is lower, the storage tank charging pump is switched on immediately.

If the function CO4 -> F15 - 1 (**SLP ON depending on return flow temperature**) is activated, the primary valve is opened without simultaneously operating the storage tank charging pump. The storage tank charging pump is first switched on when the primary return flow temperature has reached the temperature currently measured at storage tank sensor SF1. This function enables storage tank charging when the heating system is switched off, e.g. in summer mode, without cooling down the storage tank first by filling it with cold flow water. The storage tank charging pump does not start operation before a sufficiently high temperature has been reached at the heat exchanger. An activated setting CO4' -> F03 - 1 (discharging protection) causes the charging to be stopped when the charging temperature does not reach its set point even though the valve is fully open or it falls below the temperature measured at SF1 and does not rise again. Charging with the valve fully open is stopped after one hour at the latest.

i ***Note***

When a storage tank thermostat is used, the 'Charging temperature' parameter can be adjusted at the rotary switch as the absolute value instead of the 'DHW temperature' parameter.

Time-controlled switchover of storage tank sensors

By configuring a second storage tank sensor SF2, it is possible to determine by setting the function block CO4 -> F19 - 1 that the storage tank sensor SF1 is used for day mode in the DHW circuit and storage tank sensor SF2 for night mode. As a result, different storage tank volumes can be kept at a constant temperature according to a time schedule and also at different temperatures if the 'DHW temperature set point' and 'DHW temperature sustaining value' differ from one another.

Stop storage tank charging

The controller stops charging the storage tank when the water temperature measured at sensor SF1 has reached the temperature T = 'DHW temperature' + 'Hysteresis'. When there is no heating operation or when the flow temperature demand in the system is lower, the corresponding valve is closed. The storage tank charging pump is switched off after t = 'Lag time of storage tank charging pump' x 'Valve transit time'.

With the default settings, the temperature in the storage tank is increased by 5 °C to reach 65 °C when the storage tank temperature falls below 60 °C. The charging temperature is calculated from the 'DHW temperature' (60 °C) plus the 'Charging temperature boost' (10 °C), which equals 70 °C. When the storage tank has been charged, the heating valve is closed and the charging pump continues to run for the time t. Outside the times-of-use, the storage tank is only charged when the temperature falls below 40 °C ('DHW temperature sustaining value'). In this case, the tank is charged with a charging temperature of 50 °C until 45 °C is reached in the tank.

Functions	Default	Configuration
Storage tank sensor SF1	1	CO4 -> F01 - 1
Storage tank sensor SF2		CO4 -> F02 (-1 when CO4 -> F19 - 1)
SLP ON depending on return flow temperature	0	CO4 -> F15
Time-controlled changeover of storage tank sensors	0	CO4 -> F19 (-1 only when CO4 -> F02 - 1)
Discharging protection	0	CO4' -> F03 - 1

Parameters	Default	Switch position: value range
DHW temperature set point or charging temperature with CO4 -> F01 - 0 setting	60.0 °C	☼: Min. to max. DHW temperature
DHW temperature sustaining value	40.0 °C	☾: Min. to max. DHW temperature

Parameters	Default	Parameter level: value range
Min. DHW temperature [1)]	40.0 °C	PA4: 5.0 to 90.0 °C
Max. DHW temperature [1)]	60.0 °C	PA4: 5.0 to 90.0 °C
Hysteresis [2)]	5.0 °C	PA4: 0.0 to 30.0 °C
Charging temperature boost [3)]	10.0 °C	PA4: 0.0 to 50.0 °C
Lag time for storage tank charging pump	1.0	PA4: 0.0 to 10.0

2) Parameters serve as limitation of the adjustment range for the DHW temperature to be set at the rotary switch
3) Deactivation value T = 'DHW temperature' + 'Hysteresis'
4) Charging temperature T = 'DHW temperature' + 'Charging temperature boost'

16.3.1.1 DHW circuit additionally controlled by a globe valve

In system Anl 11.1, the following version with globe valve can be configured instead of the three-way valve control in the DHW circuit:

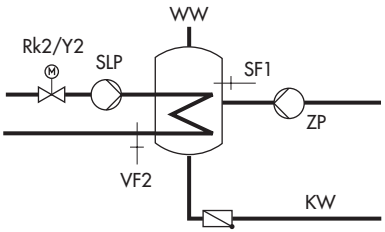

Rk2/Y2	Control circuit/valve 2
SLP	Storage tank charging pump
SF1	Storage tank sensor
VF2	Flow sensor
ZP	Circulation pump (DHW)
WW	Hot water
KW	Cold water

Fig. 16-6: *Schematics of a storage tank system with a globe valve for return flow temperature limitation*

Globe valve and flow sensor VF2 are used exclusively for return flow temperature limitation in the schematics shown above. The pre-control circuit provides at least the same flow temperature as in the standard schematic version which is calculated from 'DHW temperature set point' + 'Charging temperature boost' + 'Boost set point of pre-control circuit'.

The functions and parameters of the DHW heating in the storage tank system are upgraded by the following settings:

Functions	Default	Configuration
DHW circuit additionally controlled by a globe valve	0	CO4 -> F20 - 1
Parameters	**Default**	**Parameter level: value range**
Max. return flow temperature	65.0 °C	PA4: 20.0 to 90.0 °C

16.3.2 DHW heating in the storage tank charging system

Start storage tank charging

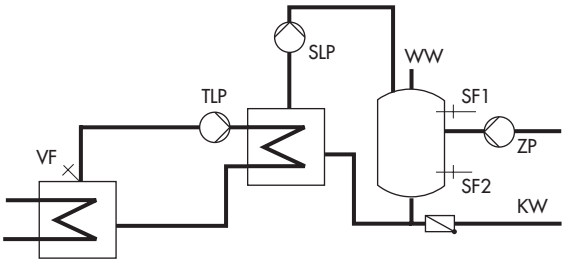

TLP	Heat exchanger charging pump
VF	Flow sensor
SLP	Storage tank charging pump
SF1	Storage tank sensor
SF2	Storage tank sensor
ZP	Circulation pump (DHW)
WW	Hot water
KW	Cold water

Fig. 16-7: *Schematics of a storage tank charging system*

The controller begins charging the storage tank when the water temperature measured at sensor SF1 falls below the 'DHW temperature set point' by 0.1 °C. If the flow temperature in the system exceeds the desired charging temperature, the controller tries to reduce the flow temperature in the heating circuit for up to three minutes before the exchanger charging pump is activated together with the storage tank charging pump.

When there is no heating operation or when the flow temperature in the system is lower, the exchanger charging pump is switched on immediately. If the temperature currently measured at sensor SF1 is reached at the sensor VF, the storage tank charging pump is switched on. An activated setting CO4' -> F03 - 1 (discharging protection) causes the charging to be stopped when the charging temperature does not reach its set point even though the valve is fully open or it falls below the temperature measured at SF1 and does not rise again. Charging with the valve fully open is stopped after one hour at the latest.

If a storage tank thermostat is used, the storage tank charging pump is switched on as soon as the temperature T = 'Charging temperature' – 5 °C is reached at the sensor VF.

i ***Note***

When a storage tank thermostat is used, the 'Charging temperature' parameter can be adjusted at the rotary switch as the absolute value instead of the 'DHW temperature' parameter.

When the flow sensor VF4 is activated, the set point in the heat exchanger circuit is influenced by the system deviation in the storage tank charging circuit upon activation of the storage tank charging pump: if the temperature measured at flow sensor VF4 is lower than the desired 'Charging temperature', the set point in the heat exchanger circuit is increased in steps of 1 °C. When the set point in the heat exchanger charging circuit reaches the 'Max. charging temperature', the set point is no longer increased. An "Err 4" error message is generated.

i ***Note***

The set point in the heat exchanger circuit which is valid at the end of the charging cycle will be used again at the beginning of the next cycle.

If times-of-use have been programmed for DHW heating, the 'DHW temperature set point' adjusted at the rotary switch is applied during these times-of-use. Outside the times-of-use, the 'DHW temperature sustaining value' parameter is used as the basis. This function does not apply when a storage tank thermostat is used.

Time-controlled switchover of storage tank sensors

By configuring a second storage tank sensor SF2, it is possible to determine by setting the function block CO4 -> F19 - 1 that the storage tank sensor SF1 is used for day mode in the DHW circuit and storage tank sensor SF2 for night mode. As a result, different storage tank volumes can be kept at a constant temperature according to a time schedule and also at different temperatures if the 'DHW temperature set point' and 'DHW temperature sustaining value' differ from one another.

Stop storage tank charging

The controller stops charging the storage tank when the water temperature measured at sensor SF2 has reached the temperature T = 'DHW temperature' + 'Hysteresis'. To do so, the heat exchanger charging pump is immediately switched off.

When there is no heating operation or when the flow temperature demand in the system is lower, the corresponding valve is closed. The storage tank charging pump is switched off after t = 'Lag time of storage tank charging pump' x 'Valve transit time'.

Functions	Default	Configuration
Storage tank sensor SF1	1	CO4 -> F01 - 1
Storage tank sensor SF2	1	CO4 -> F02 - 1
Flow sensor VF4	0	CO4 -> F05
Time-controlled changeover of storage tank sensors	0	CO4 -> F19
Discharging protection	0	CO4' -> F03 - 1

Parameters	Default	Switch position: value range
DHW temperature set point or charging temperature with CO4 -> F01 - 0 setting	60.0 °C	🌡☼: Min. to max. DHW temperature
DHW temperature sustaining value	40.0 °C	🌡☾: Min. to max. DHW temperature

Parameters	Default	Parameter level: value range
Min. DHW temperature 1)	40.0 °C	PA4: 5.0 to 90.0 °C
Max. DHW temperature [1)]	60.0 °C	PA4: 5.0 to 90.0 °C
Hysteresis [2)]	5.0 °C	PA4: 1.0 to 30.0 °C
Charging temperature boost [3)]	10.0 °C	PA4: 0.0 to 50.0 °C
Max. charging temperature	80.0 °C	PA4: 20.0 to 150.0 °C (only with VF4)
Lag time for storage tank charging pump	1.0	PA4: 0.0 to 10.0

1) Parameters serve as limitation of the adjustment range for the DHW temperature to be set at the rotary switch
2) Deactivation value T = 'DHW temperature' + 'Hysteresis'
3) Charging temperature T = 'DHW temperature' + 'Charging temperature boost'

16.3.2.1 Cold charging protection

In system Anl 1.1(-1), the **cold charging protection** function causes a storage tank charging to be started first when the primary flow temperature is sufficiently high enough.
The CO4 > F22 - 1 setting automatically activates the input FG2 to measure the primary flow temperature. If the measured primary flow temperature is lower than the measured storage tank temperature (e.g. due to a supply line that has cooled down at the start of a storage tank charging), the heating circuit valve is moved to the adjusted position at first. The storage tank charging is not released in absolute priority operation until the primary flow temperature has risen enough as a result. Parallel operation must be additionally configured if it is required.

Functions	Default	Configuration
Cold charging protection	0 10 %	CO4 -> F22 - 1 Valve position: 1 to 100 %
Parallel pump operation	0 10 min 40.0 °C	CO4 -> F06 - 1 Cancel: 0 to 10 min Temperature limit: 20.0 to 90.0 °C

16.3.3 DHW heating in instantaneous heating system

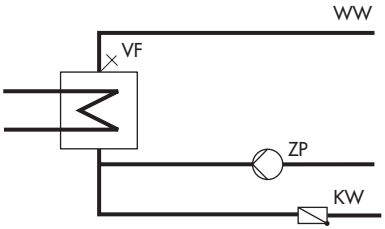

VF	Flow sensor
ZP	Circulation pump (DHW)
WW	Hot water
KW	Cold water

Fig. 16-8: *Schematics of an instantaneous heating system*

The control of the required 'DHW temperature' at the flow sensor VF is only active during times-of-use of the circulation pump ZP.

Parameters	Default	Switch position: value range
DHW temperature set point	60.0 °C	☼: Min. to max. DHW temperature
DHW temperature sustaining value	40.0 °C	☾: Min. to max. DHW temperature

Parameters	Default	Parameter level: value range
Min. DHW temperature	40.0 °C	PA4: 5.0 to 90.0 °C
Max. DHW temperature	60.0 °C	PA4: 5.0 to 90.0 °C

16.3.4 Domestic hot water heating with solar system

The systems Anl 1.3 and 2.3 are fitted with a solar system for DHW heating. In these systems, the difference between the temperatures measured at storage sensor SF2 and the sensor at the solar collector VF3 is determined. The 'Solar circuit pump ON' parameter determines the minimum temperature difference between sensors VF3 and SF2 required to activate the solar circuit pump. If the temperature difference falls below the value of 'Solar circuit pump OFF', the solar circuit pump is switched off. Basically, the solar circuit pump is also

switched off when either the water temperature measured at sensor SF2 has reached the 'Max. storage tank temperature' or when the solar collector temperature rises above 120 °C.

i ***Note***

The times-of-use of the DHW circuit do not affect the operation of the solar system.

After the key number 1999 has been entered, the operating hours of the solar pump are displayed in extended information level.

Parameters	Default	Parameter level: value range
Solar circuit pump ON	10.0 °C	PA4: 1.0 to 30.0 °C
Solar circuit pump OFF	3.0 °C	PA4: 0.0 to 30.0 °C
Max. storage tank temperature	80.0 °C	PA4: 20.0 to 90.0 °C

16.3.5 Intermediate heating

This function can only be activated in systems Anl 2.x, 4.1 and 4.5.

With the setting CO4 -> F07 - 1, heating operation of the UP1 heating circuit is reactivated for a period of ten minutes after 20 minutes of priority operation (heating deactivated during DHW heating). By setting CO4 -> F07 - 0, storage tank charging is given unlimited priority over the heating operation in the UP1 heating circuit.

Functions	Default	Configuration
Intermediate heating	1	CO4 -> F07 - 1

16.3.6 Parallel pump operation

This function can only be activated in systems Anl 2.1 to 2.1, 4.1 and 4.5.

When CO4 -> F06 - 1, the circulation pump UP1 remains activated during DHW heating.

This does not include operating situations during which the current flow temperature demand of the pump circuit is lower than the adjusted 'Flow temperature limit for parallel operation'. In this case, the controller applies priority operation, if necessary with intermediate heating. Once a parallel pump operation cycle has been activated and the time period set in 'Stop parallel pump operation in the event of a system deviation' has elapsed, system deviations greater than 5 °C cause the controller to suspend parallel operation for 10 minutes and to apply priority operation.

Setting 'Stop parallel pump operation in the event of a system deviation' to 0 min leads to a parallel operation once initiated remaining regardless of a deviation.

Functions	Default	Configuration
Parallel pump operation	0 10 min 40.0 °C	CO4 -> F06 - 1 Stop parallel pump operation in the event of a system deviation: 0 to 10 min Flow temperature limit for parallel operation: 20.0 to 90.0 °C

16.3.7 Circulation pump during storage tank charging

With the setting CO4 -> F11 - 1, the circulation pump (DHW) continues operation according to the programmed time schedule even during storage tank charging. With the setting CO4 -> F11 - 0, the circulation pump is switched off as soon as the storage tank charging pump is activated. The circulation pump starts to operate again according to the time schedule when the storage tank charging pump has been switched off again.

Functions	Default	Configuration
Circulation pump operation during storage tank charging	0	CO4 -> F11

16.3.8 Priority circuit

In many district heating systems with primary DHW heating, the allotted amount of water cannot meet DHW heating and heating operation demands when they are required at the same time. As a result, the capacity required for DHW heating needs to be taken from the heating system when great heating loads occur; and this, until DHW demand has been concluded. Nevertheless, heating operation is not to be interrupted simply. Only the amount of energy required for DHW heating is to be deducted. This can be achieved by using the priority functions: **reverse control** and set-**back operation**.

The priority functions (reverse control and priority operation) can be activated for each heating circuit separately in system Anl 4.5.

Rk1

Rk2

Rk1+Rk2

16.3.8.1 Reverse control

In all systems with DHW heating and at least one heating circuit with a control valve, DHW heating can be given priority by applying reverse control. With the setting CO4 -> F08 - 1, the temperature is monitored at sensor VFx.

In systems without sensor VFx in the DHW circuit (e.g. Anl 4.5, 11.0), the temperature is monitored directly at storage tank sensor SF1. If system deviations still occur after the time set in 'Activate priority in the event of a system deviation' has elapsed, the set point of the heating circuit with the control valve is gradually reduced each minute until the flow temperature set point has reached 5 °C at the minimum. How strongly the controller responds is determined by the 'Influence factor KP'.

When 'Activate priority in the event of a system deviation' is set to 0, the priority operation is started regardless of the time and temperature in the system. The control valve of the corresponding heating circuit is closed.

Functions	Default	Configuration
Priority through reverse control	0	CO4 -> F08 - 1
	2 min	Activate priority in the event of a system deviation: 0 to 10 min
	1.0	KP (influence factor): 0.1 to 10.0
	HC2	Control circuit selection
Priority through set-back operation	0	CO4 -> F09 - 0

16.3.8.2 Set-back operation

In all systems with DHW heating and at least one heating circuit with a control valve, DHW heating can be given priority by applying set-back operation. With the setting CO4 -> F09 - 1, the temperature is monitored at sensor VFx in the DHW circuit.

In systems without sensor VFx in the DHW circuit (e.g. Anl 4.5, 11.0), the temperature is monitored directly at storage tank sensor SF1. If system deviations still occur after the time set in 'Activate priority in the event of a system deviation' has elapsed, the selected heating circuit with the control valve is set to reduced operation.

When 'Activate priority in the event of a system deviation' is set to 0, the priority operation is started regardless of the time and temperature in the system. of all heating circuits.

Functions	Default	Configuration
Priority through reverse control	0	CO4 -> F08 - 0
Priority through set-back operation	0 2 min HC2	CO4 -> F09 - 1 Activate priority in the event of a system deviation: 0 to 10 min Control circuit selection

16.3.9 Forced charging of DHW storage tank

To provide the full network performance for room heating when the time-of-use of the heating circuits begins, any storage tanks are charged one hour before the time-of-use of the heating circuits starts. For the individual controller, this means that storage tank charging is activated when the water temperature in the storage tank falls below the adjusted deactivation value of T = 'DHW temperature' + 'Hysteresis'.

The forced charging of the storage tank does not take place when the DHW circuit is not used at the beginning of the time-of-use set for the heating circuit(s).

i ***Note***

This function is not available when a storage tank thermostat is used.

16.3.10 Thermal disinfection of DHW storage tank

In all systems with DHW heating, a thermal disinfection is performed on the selected 'Day of the week' or daily.

– In systems with DHW storage tank, it is heated up, taking into account the Charging temperature boost parameter (or Set point boost, depending on the system) to the adjusted Disinfection temperature. The process starts the adjusted 'Start time' and ends at the 'Stop time' at the latest.
– In systems with DHW heating in instantaneous heating system, the function remains active taking into account the 'Set point boost' parameter until the circulation pipe, measured at storage tank sensor SF1, has reached the adjusted 'Disinfection temperature', provided disinfection has not been terminated prematurely after reaching the 'Stop time'.

The 'Disinfection temperature sustaining time' determines how long the disinfection temperature must be maintained within the adjusted time period to rate the process successful. If the 'Disinfection temperature sustaining time' is set to a value other than 0, no intermediate heating operation takes place during thermal disinfection.

When 'Start time' and 'Stop time' are set to an identical time, disinfection is controlled depending on the switching state of the binary input (terminals 03/12) to be performed daily or on the programmed day of the week: disinfection starts optionally with a break contact (BI = 0) or a make contact (BI = 1). The process stops at the latest when the switching state of the binary input next changes.

When the 'Disinfection temperature' has not been reached before the end of the thermal disinfection cycle, an "Err 3" error message is generated. This error message can also be generated prematurely if the remaining time until the disinfection temperature is reached is shorter than the adjusted 'Disinfection temperature sustaining time'. The error message is automatically reset when the disinfection temperature is properly reached during the following thermal disinfection cycle.

Thermal disinfection for preventing legionella infection has the following effect:

– High return flow temperatures during the disinfection cycle (return flow temperature limitation suspended)
– High DHW temperatures after thermal disinfection has been concluded
– Possibly lime scale, which can have a negative effect on heat exchanger performance.

i ***Note***

– This function is not available when a storage tank thermostat is used.
– The forced operation of the circulation pump (DHW) starts while thermal disinfection is active.

Functions	Default	Configuration
Storage tank sensor SF1	1	CO4 -> F01 - 1
Thermal disinfection	0	CO4 -> F14 - 1
	3	Day of the week: 1-7, 1, 2, …, 7, with 1-7 = daily, 1 = Monday, …, 7 = Sunday
	00:00	Start time: 00:00 to 23:45 h; in steps of 15 minutes
	04:00	Stop time: 00:00 to 23:45 h; in steps of 15 minutes
	70.0 °C	Disinfection temperature: 60.0 to 90.0 °C
	10.0 °C	Set point boost: 0 to 50 °C
	0 min	Disinfection temperature sustaining time: 0 to 255 min
	BI = 1	BI = 1, BI = 0 (start of disinfection with terminal 03/12 = ON, OFF; only applies when Start time = Stop time)

16.4 System-wide functions

16.4.1 Automatic summer/standard time switchover

The time is automatically changed on the last Sunday in March at 2.00 h and on the last Sunday in October at 3.00 h.

Functions	Default	Configuration
Summer time	1	CO5 -> F08 - 1

16.4.2 Frost protection

Frost protection measures are taken when the outdoor temperature falls below 'Frost protection limit'. The switching differential to cancel the frost protection measures is always 1 °C.

Frost protection program I (restricted frost protection)

Frost protection measures are taken only when all heating circuits in the system are in stand-by mode. The circulation pumps are automatically switched on and their flow temperature set points are adjusted to 10 °C. The circulation pump in the DHW circuit is automatically switched on only when the stand-by mode has been adjusted at the rotary switch in all heating circuits. Nevertheless, the storage tank is always recharged to 10 °C if the storage tank temperature falls below 5 °C.

Frost protection program II:

The heating circuit circulation pumps are always switched on automatically. The flow temperature set points of all heating circuits currently in stand-by mode are set to +10 °C. In the DHW circuit, the circulation pump is always activated. If the storage tank temperature falls below +5 °C, the storage tank is recharged to +10 °C.

Functions	Default	Configuration
Frost protection program I	3.0 °C	CO5 -> F09 - 0 Frost protection limit: –15 to +3.0 °C
Frost protection program II	3.0 °C	CO5 -> F09 - 1 Frost protection limit: –15 to +3.0 °C

i *Note*

Frost protection operation of a pump, a heating circuit or the DHW circuit is only active when the ❄ frost protection icon is displayed. In the stand-by mode (⏻) fixed set point control without outdoor temperature sensor does not include frost protection.

16.4.3 Forced pump operation

When the heating circuit pumps have not been activated for 24 hours, forced operation of the pumps is started between 12.02 h and 12.03 h. This is done to avoid that the pumps get stuck when they are not operated for long periods of time. In the DHW circuit, the circulation pump is operated between 12.04 h and 12.05 h, the other pumps between 12.05 h and 12.06 h.

16.4.4 Return flow temperature limitation

The temperature difference between the flow and return flow in a network indicates how well the energy is used: the greater the difference, the higher the efficiency. A return flow sensor is sufficient to evaluate the temperature difference when the flow temperatures are predefined. The return flow temperature can be limited either to a value depending on the outdoor temperature (variable) or to a fixed set point. When the temperature measured at return flow sensor RüF exceeds the return flow temperature limit, the set point of the flow temperature (flow temperature of the heating system, charging temperature) is reduced. This causes the primary flow rate to be reduced and the return flow temperature to drop. In systems Anl 2.x and 4.1, the 'Max. return flow temperature' parameter (PA4 level) is used for limitation in the primary circuit during DHW heating if it is greater than the parameter valid for the primary circuit. The 'Limiting factor KP' determines how strongly the controller responds when the limits are exceeded in either direction (PI algorithm).

If just the proportional component is to be implemented, set CO5 -> F16 - 1. This allows the integral-action component in the return flow temperature limitation algorithm of all control circuits of the controller to be deactivated. The set point reading (flow temperature of the heating, charging temperature) blinks to indicate that a return flow limitation is active in the control circuit concerned.

i ***Note***

When outdoor-temperature-compensated control with gradient characteristic is used, the return flow temperature is limited to a fixed value by equating the 'Base point for return flow temperature' and 'Max. return flow temperature' (PA1, 2) parameters.

Functions	Default	Configuration
Return flow sensor RüF1/RüF2	1 1.0	CO1, 2, 4 -> F03 - 1 KP (limiting factor): 0.1 to 10.0
Return flow temperature limitation with P algorithm [1)]	0	CO5 -> F16

[1)] If the controller indicates CO5 -> F00 - 1, any access to the return flow, flow rate and capacity settings is locked.

Parameters	Default	Parameter level: value range
Return flow gradient	1.2	PA1, 2 : 0.2 to 3.2
Return flow level	0.0 °C	PA1, 2: –30.0 to +30.0 °C
Base point for return flow temperature:	65.0 °C	PA1, 2: 5.0 to 90.0 °C
Max. return flow temperature	65.0 °C	PA1, 2, 4: 5.0 to 90.0 °C

or:

Parameters	Default	Parameter level: value range
Return flow temperature, points 1 to 4	65.0 °C	PA1, 2: 5.0 to 90.0 °C

! ***NOTICE***

To ensure the preset return flow temperature limit can be kept, make sure that the following conditions are met:

➔ *Do not adjust the heating characteristic to ascend too steeply.*

➔ *The speed of the circulation pumps is not set too high.*

➔ *The heating systems have been balanced.*

16.4.5 Condensate accumulation control

Activate the **limitation of set point deviation for OPEN signal** function to start up condensate accumulation plants, in particular to avoid problematic excess temperatures. The controller response to set point deviations which cause the primary valve to open is attenuated. The controller response to set point deviations which cause the control valve to close remains unaffected.

Note

The **condensate accumulation control** *function can only be activated when the control circuit concerned is controlled using a PI algorithm (three-step control).*

Functions	Default	Configuration
Control mode	1	CO1, 2, 4 -> F12 - 1
Limitation of set point deviation for OPEN signal	0 3.0 °C	CO1, 2, 4 -> F13 - 1 Max. system deviation: 3.0 to 10.0 °C

16.4.6 Three-step control

The flow temperature can be controlled using a PI algorithm. The valve reacts to pulses that the controller sends when a system deviation occurs. The length of the first pulse, in particular, depends on the extent of the system deviation and the selected 'Gain KP' (the pulse length increases as KP increases). The pulse and pause lengths change continuously until the system deviation has been eliminated. The pause length between the single pulses is greatly influenced by the 'Reset time Tn' (the pause length increases as Tn increases). The 'Valve transit time TY' specifies the time required by the valve to travel through the range of 0 to 100 %.

Functions	Default	Configuration
Control mode	1 2.0 120 s 0 s 35 s	CO1, 2, 4 -> F12 - 1, Rk_ KP (gain): 0.1 to 50.0 Tn (reset time): 1 to 999 s TV (derivative-action time): **do not change the value.** TY (valve transit time): 15, … , 240 s

16.4.7 On/off control

The flow temperature can be controlled, for example by activating and deactivating a boiler. The controller switches on the boiler when the flow temperature falls below the set point by T = 0.5 x 'Hysteresis'. When the set point is exceeded by T = 0.5 x 'Hysteresis', the boiler is switched off again. The greater the value you choose for 'Hysteresis', the less frequent switching on and off will be. By setting the 'Minimum ON time', an activated boiler remains switched on during this period regardless of the flow temperature fluctuations. Similarly, a deactivated boiler will remain switched off regardless of the flow temperature fluctuations if the Min. OFF time has been specified.

Functions	Default	Configuration
Control mode	1	CO1, 2, 4 -> F12 - 0
	5.0 °C	Hysteresis: 1.0 to 30.0 °C
	2 min	Min. ON time: 0 to 10 min
	2 min	Min. OFF time: 0 to 10 min

16.4.8 Continuous control in control circuit Rk1

The flow temperature in the control circuit Rk1 can be controlled using a PID algorithm. The valve in Rk1 control circuit receives an analog 0 to 10 V signal from the controller. When a system deviation occurs, 'Proportional-action coefficient KP' immediately causes the 0 to 10 V signal to change (the greater the KP, the greater the change). The integral component becomes effective with time: 'Reset time Tn' represents the time which elapses until the integral component has changed the output signal to the same extent as the immediate change performed by the proportional component (the greater Tn is, the slower the rate of change will be). Due to the derivative component, any change of the system deviation is incorporated into the output signal with a certain gain (the greater 'Derivative-action time TV' is, the stronger the change will be).

Functions	Default	Configuration
Control mode	1	CO1 -> F12 - 1
	2.0	KP (gain): 0.1 to 50.0
	120 s	Tn (reset time): 1 to 999 s
	0 s	TV (derivative-action time): 0 to 999 s
	35 s	TY (valve transit time): 15, … , 240 s

16.4.9 Releasing a control circuit/controller with binary input

The release of an individual control circuit or the controller with the binary input only becomes effective when the respective control circuit is in automatic mode (🕘 icon). The released control circuit always works in automatic mode; the deactivated control circuit behaves as if it were transferred to stand-by mode (⏻). Control operation remains active, however, in any case for processing an external demand. The control circuit can be released by the binary input when the binary input is either a make contact (BI = 0) or a break contact (BI = 1).

i ***Note***

– In systems with downstream heating circuit without a valve (Anl 2.x, 4.x), BI1 only influences the operation of this heating circuit.

– In system Anl 3.0, BI1 influences the operation of the entire controller (except for processing an external demand).

Functions	Default	Configuration
Release RK1 at input BI1	0 BI = 1	CO1 -> F14 - 1 bE = 1, bE = 0
Release controller Rk2 at input BI2	0 BI = 1	CO2 -> F14 - 1 bE = 1, bE = 0
Release controller at input BI1	0 1	CO5 -> F15 - 1 bE = 1, bE = 0

16.4.10 Speed control of the charging pump

This function allows the delivery rate of the charging pump in systems with buffer tank (CO1 -> F21 - 1) and in systems with DHW storage tank (CO4 -> F21 - 1) to be varied based on the temperature. When this function is activated, the input SF2 is automatically activated. In combination with CO1 -> F06 - 0 or CO4 -> F02 - 0, this input is only used for speed control and not to stop the storage tank charging.

All storage tank charging actions start with the minimum delivery rate of the charging pumps. As soon as the charging temperature is nearly reached, the delivery rate of the charging pump is increased and the valve controls the flow rate. If the charging temperature drops 5 °C below its associated set point, the delivery rate is reduced again. At the latest when the temperature at SF2 has reached the 'Start' value to reduce the delivery rate, the linear reduction of the delivery rate based on the temperature at SF2 starts. If the temperature at SF2 reaches the 'Stop' value to reduce the delivery rate, the charging pump runs again at

the minimum delivery rate. Following the lag time, the charging pump is finally deactivated when the storage is fully charged.

Functions	Default	Configuration
Speed control of the charging pump	0 40.0 °C 50.0 °C 20 %	CO1 -> F21 - 1 or CO4 -> F21 - 1 Start speed reduction - SF2 limit: 5.0 to 90.0 °C Stop speed reduction - SF2 limit: 5.0 to 90.0 °C Min. speed signal: 0 to 50 %
AA (terminals 11/12) reverse	0 0 %	CO5' -> F01 - 1 Zero: 0 to 50 %
AA (terminals 11/12) PWM	0	CO5' -> F10 - 0 (TROVIS *5573* cannot process a PWM signal) *7* = SLP speed

16.4.11 External demand processing

The controller can process binary or analog requests for an externally required signal by a more complex secondary system. A binary request can only be processed when the input SF2/RF2 is not assigned to a sensor.

! *NOTICE*

Risk of damage of the heating circuit through overheating.

Overheating may occur in the heating circuits of the primary controller without control valve.

Excessive charging temperatures in DHW circuits without control valve controlled by the primary controller are excluded when the default settings of the controller are used: while storage tank charging is active, no flow temperature higher than the charging temperature is used by the primary controller. If the **Priority for external demand** function is activated, the external demand is also processed during storage tank charging. The heating circuits can be configured in such a way that they only process external demand. The possible settings for each heating circuit do not apply with this configuration as only the external demand is processed with associated UP as feeder pump.

Functions	Default	Configuration
Priority for external demand	0	CO4 -> F16 - 1
Demand only	0 0	CO1' -> F00 - 1 CO2' -> F00 - 1

Binary demand processing

Regardless of the operating mode set for control circuit Rk1, except for manual mode, the controller regulates the flow temperature when either the binary input (terminals 03/12) is a make contact (BI = 0) or a break contact (BI = 1) in control circuit Rk1 to at least the adjusted flow temperature adjusted in 'Set point for binary demand processing'.

Functions	Default	Configuration
Demand processing, 0 to 10 V	0	CO1, 2 -> F16 - 0
Binary demand processing	0 BI = 1	CO1 -> F17 - 1 bE = 1, bE = 0

Parameters	Default	Parameter level: value range
Set point for binary demand processing	40.0 °C	PA1: 0.0 to 150.0 °C

Demand processing, 0 to 10 V

Regardless of the operating mode set for the control circuit concerned (except for manual mode), the controller regulates the flow temperature at least to the temperature corresponding with the 0 to 10 V signal connected to terminals 11/12.

Functions	Default	Configuration
Demand processing, 0 to 10 V	0	CO1, 2 -> F16 - 1
AE Zero shift	0	CO5' -> F07 - 0
	0 °C	Lower transmission range: 0 to 150 °C
	120 °C	Upper transmission range: 0 to 150 °C
	0	CO5' -> F07 - 1
	5 %	Zero: 5 to 20 %
	0 °C	Lower transmission range: 0 to 150 °C
	120 °C	Upper transmission range: 0 to 150 °C
Binary demand processing	0	CO1 -> F17 - 0

Parameters	Default	Parameter level: value range
Set point boost (primary exchanger control)	5 °C	PA1, 2: 0 to 50 °C

16.4.12 External demand using a 0 to 10 V signal

The controller can request a demand for the maximum flow set point (with boost, if need be) by issuing an analog 0 to 10 V signal for external demand. For this purpose, the 0 to 10 V output is used as an alternative to issuing the control signal.

Analog or binary demand processing can be integrated into the analog request for an external demand.

Functions	Default	Configuration
External demand	0 0.0 °C 120.0 °C 0.0 °C	CO1 -> F18 - 1 Lower transmission range: 0.0 to 150.0 °C Upper transmission range: 0.0 to 150.0 °C Boost: 0.0 to 30.0 °C
AA (terminals 11/12) PWM	0	CO5' -> F10 - 0 Function: 6 = External demand

16.4.13 Creep feed rate limitation with a binary input

It is possible to report to the controller when the creep feed rate has fallen below a certain level by using a limit switch of the primary valve connected to the terminals 04/12 or to input RüF1. Either the open (BI = 0) or closed binary input (BI = 1) can be configured at terminals 04/12 to indicate that the creep feed rate has fallen below a certain level. Only the closed binary input at RüF1 can be processed. Shortly after the alert, the controller closes the valve Rk1. As soon as the flow temperature falls below the set point by more than 5 °C after the valve has been closed, control operation is started again.

Functions	Default	Configuration
Creep feed rate limitation	0 bin BI = 1	CO5 -> F12 - 1 bin (terminals 04/12), AnA (RüF1) When 'bin' is selected: BI = 0, BI = 1

16.4.14 Connecting potentiometers for valve position input

The FG1 and FG2 inputs can be used to connect potentiometers, for example to input valve positions when a resistance room sensor is not configured in the control circuit concerned. The measured values (in the measuring ranges from 0 to 2000 Ω) do not appear on the controller display. They are only available as Modbus data points.

Functions	Default	Configuration
Room sensor RF1, 2	0	CO1, 2 -> F01 - 0

16.4.15 Locking manual level

To protect the heating system, this function can be used to lock the manual level. When this function has been activated, automatic mode is started when the rotary switch is set to in automatic mode.

Functions	Default	Configuration
Lock manual level	0	CO5 -> F21 - 1

16.4.16 Locking the rotary switch

When this function has been activated, the controller remains in automatic mode regardless of the rotary switch position. The rotary switch can no longer be used to adjust the controller settings. It is still possible to enter the key number.

Functions	Default	Configuration
Lock the rotary switch	0	CO5 -> F22 - 1

16.4.17 Feeder pump operation

In system Anl 3.0, the feeder pump UP1 only starts to operate in the default setting when a flow temperature demand of a secondary controller exists. If CO5 -> F14 - 1 is configured, this is also the case when the control circuit Rk2 requires heat.

Functions	Default	Configuration
Operation UP1	0	CO5 -> F14 - 1

16.4.18 External demand for heat due to insufficient heat supply

An external heat source can be demanded using the 0 to 10 V output. The function block for a request for external demand CO1 -> F18 - 1 is automatically set. The function block parameters allow the transmission range to be determined. When a system deviation in Rk1 greater than 10 °C lasts longer than 30 minutes, a voltage signal corresponding to the actual demand is issued. At the same time, the Rk1 valve is forced to close. The Rk1 valve icon blinks to indicate that the operating situation has changed as long as the external heat source is released. After 30 minutes, the external demand for heat is canceled (0 V issued) and the control signal output in Rk1 is enabled again.

Functions	Default	Configuration
External demand for heat due to insufficient heat supply	0	CO1 -> F20 - 1
External demand	0 0.0 °C 120.0 °C 0.0 °C	CO1 -> F18 - 1 Lower transmission range: 0.0 to 150.0 °C Upper transmission range: 0.0 to 150.0 °C Boost: 0.0 to 30.0 °C
AA (terminals 11/12) PWM	0	CO5' -> F10 - 0 Function: 6 = External demand

16.5 Communication

Using the optional RS-485 communication module (Modbus RTU interface for two-wire bus networks), the TROVIS 5573 Heating Controller can communicate with a control system. In combination with a suitable software for process visualization and communication, a complete control system can be implemented.

i ***Note***

The operating software can be updated over a data cable, provided Modbus has been activated (CO6 -> F01 - 1).

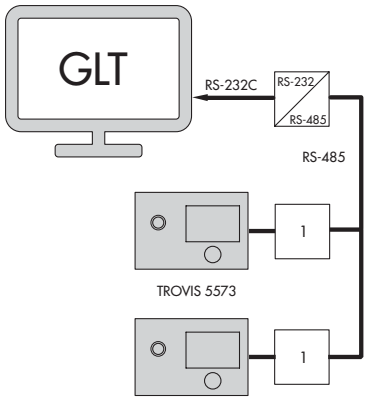

1: Optional RS-485 communication module

Fig. 16-9: *Network structure*

16.5.1 RS-485 communication module

When looking onto the controller front, the connection for the optional communication module (icon, order no. 8812-2002) is located on the left side of the controller housing (RJ-45 connector socket). The bus line links the control units/devices in an open ring. At the end of the bus line, the data cable is connected to the control station using an RS-485 to RS-232 converter (e.g. CoRe02).

The maximum range of the bus connection (cable length) is 1200 meters. For greater distances, repeaters (e.g. CoRe02) must be used to regenerate the signal level. A maximum of 246 devices with 8-bit addressing can be connected to a bus.

If no communication is established between the control system and controller, the time of access by the control system can be restricted to dynamic process by the **monitoring** function. The controller resets the monitoring function, provided the valid Modbus requests are registered. However, in case of an error, all level bits are initialized back to “autonomous” after 30 minutes have elapsed.

NOTICE

Risk of damage of the heating circuit due to lightning or overvoltage.

➔ *Upon installation, observe the relevant standards and regulations governing lightning and overvoltage protection.*

Functions	Default	Configuration
Modbus	1	CO6 -> F01 - 1
16-bit address	0	CO6 -> F02
Monitoring	0	CO6 -> F07
Parameters [1)]	**Default**	**Parameter level: value range**
Station address (ST)	255	PA6: 1 to 247 With CO6 -> F02 - 1: 1 to 32000

Description of communication parameter settings

– Station address (ST)
  This address is used to identify the controller in bus or modem mode. In a system, each controller needs to be assigned a unique address.

16.5.2 Memory module/mini module

The use of a memory module or mini module (see Appendix B) is particularly useful to transfer all data from one TROVIS 5573 Controller to several other TROVIS 5573 Controllers.

Note

In contrast to the memory module, the mini module is not suitable for transferring the programmed vacations to the individual control circuits or a data logging configuration programmed in TROVIS-VIEW.

The memory module/mini module is plugged into the RJ-45 connector socket located at the side of the controller. Once the module has been connected, '73 SP' appears on the controller display. If the memory module already contains data from a different TROVIS 5573 Controller, turn the rotary pushbutton until 'SP 73' is displayed.

– Pressing the rotary pushbutton to confirm '73 SP' causes the controller settings to be transferred to the memory module/mini module.
– Pressing the rotary pushbutton to confirm 'SP 73' causes the controller settings to be transferred from the memory module/mini module.

While the data is being exchanged, bars run across the display. When the transfer is completed, 'I.O.' is displayed. After that, the connection between controller and memory module/mini module can be terminated.

TROVIS-VIEW allows users to configure all controller settings on a convenient user interface at the computer and to document these settings.

16.5.3 Data logging

A data logging module (see Appendix B) saves the following controller data every two minutes:

– Temperatures measured by the sensors
– Control signals in %
– Switching states of the pump outputs

The data logging module is plugged into the RJ-45 connector socket located at the side of the controller.

The controller starts to write over the oldest data as soon the memory of the data logging module is full after approximately eight days. The current memory capacity of the data logging module can be read in the extended information level under InFo 2 as the second value in the sequence (range of values: 0 to 6035). Directly after inserting the data logging module, data can be first read after the first scanning cycle has been performed.

The data log viewer software allows the data to be viewed in graph format. The USB converter 3 (see Appendix B) is required to connect the data logging module to a computer. The data log viewer software is supplied together with the USB converter 3.

16.6 Function block lists

CO1: Rk1 · Heating circuit 1 (not system Anl 1.9) [1)]

F	Function	WE	Anl	Comments Function block parameters: value range (default setting)
01	Room sensor RF1	0	Not systems Anl 1.5, 1.6, 3.x, 16.x	CO1 -> F01 - 1: Temperature reading and FG1 input for Type 5244 and 5257-5 or Type 5257-51 Room Panels active
02	Outdoor sensor	0	1.5, 1.6	CO1 -> F02 - 1: Outdoor sensor AF1 Outdoor-temperature-compensated control active
		1	Not Anl 1.5, 1.6	
03	Return flow sensor RüF1	0	1.2	CO1 -> F03 - 1: Sensor and limitation function active **Function block parameters:** KP (limiting factor): 0.1 to 10.0 (1.0)
		1	Not Anl 1.2	
04	Cooling control	0	All [1)]	CO1 -> F04 - 1: Cooling control, only with CO1 -> F11 - 1 The cooling control function causes a reversal of the operating direction and a minimum limitation of the return flow temperature in Rk1.
05	Underfloor heating Drying of jointless floors	0	Not systems Anl 1.5, 1.6, 3.x, 16.x	CO1 -> F05 - 1: Restriction of the adjustment ranges **Function block parameters:** Boost: 0.0 to 50.0 °C (0.0 °C) Start temperature: 20.0 to 60.0 °C (25 °C) Hold (days): 0 to 10 days (0) Temp. rise/day: 0.0 to 10.0 °C (5.0 °C) Maximum temperature: 25.0 to 60.0 °C (45.0 °C) Hold (days): 0 to 10 days (4) Temp. reduction/day: 0.0 to 10.0 °C (0.0 °C) STOP, ▪START, ▪▪START, ▪▪▪START, ▪▪▪▪START
06	Storage tank sensor SF2	1	System Anl 16.x only	CO1 -> F06: Activate SF2 to switch off charging of the buffer tank
07	Optimization	0	Not systems Anl 1.5, 1.6, 3.x, 16.x	CO1 -> F07 - 1: only when CO1 -> F01 - 1 and CO1 -> F02 - 1
08	Adaptation	0	Not systems Anl 1.5, 1.6, 3.x, 16.x	CO1 -> F08 - 1: only when CO1 -> F01 - 1, CO1 -> F02 - 1 and CO1 -> F11 - 0

F	Function	WE	Anl	Comments Function block parameters: value range (default setting)
09	Flash adaptation	0	Not systems Anl 1.5, 1.6, 3.x, 16.x	CO1 -> F09 - 1: only when CO1 -> F01 - 1 **Function block parameters:** Cycle time: 0 or 1 to 100 min (20 min) KP (gain): 0.0 to 25.0 (0.0)
11	Four-point characteristic	0	Not Anl 1.5, 1.6	CO1 -> F11 - 1: Four-point characteristic (only when CO1 -> F08 - 0) CO1 -> F11 - 0: Gradient characteristic
12	Control mode	1	All [1]	CO1 -> F12 - 1: Three-step control **Function block parameters:** KP (gain): 0.1 to 50.0 (2.0) Tn (reset time): 1 to 999 s (120 s) TV (derivative-action time): 0 to 999 s (0 s) TY (valve transit time): 15, …, 240 s (35 s) CO1 -> F12 - 0: On/off control **Function block parameters:** Hysteresis: 1.0 to 30.0 °C (5.0 °C) Min. ON time: 0 to 10 min (2 min) Min. OFF time: 0 to 10 min (2 min)
13	Limitation of set point deviation for OPEN signal	0	All [1]	CO1 -> F13 - 1: only when CO1 -> F12 - 1 **Function block parameters:** Max. system deviation: 3.0 to 10.0 °C (3.0 °C)
14	Release RK1 at input BI1	0	All [1]	CO1 -> F14 - 1: FG1 has no function. **Selection:** BI = 1, BI = 0 (BI = 1)
16	Demand processing, 0 to 10 V Input terminals 11/12	0	All [1]	CO1 -> F16 - 1: only when CO1 -> F17 - 0 The standardized signal output (terminals 11/12) is not available anymore as a control output.
17	Binary demand processing Input terminals 03/12	0	Not for systems with SF2/ RF2	CO1 -> F17 - 1: only when CO1 -> F16 - 0 **Selection:** BI = 1, BI = 0 (BI = 1)

F	Function	WE	Anl	Comments Function block parameters: value range (default setting)
18	Request max. flow set point using 0 to 10 V Output terminals 11/12	0	All [1)]	CO1 -> F18 - 1: the standardized signal output (terminals 11/12) is not available anymore as a control output. The maximum flow set point (with boost, if applicable) is demanded as a 0 to 10 V signal at the standardized signal output. **Function block parameters:** Lower transmission range: 0.0 to 150.0 °C (0.0 °C) Upper transmission range: 0.0 to 150.0 °C (120.0 °C) Boost flow temperature demand: 0 to 30.0 °C (0 °C)
20	External demand for heat due to insufficient heat supply	0	All	CO1 -> F20 - 1: Demand of an external heat source
21	Speed control of the charging pump	0	16.x	CO1 -> F21 - 1: Temperature-based adaptation of the delivery rate of the charging pump **Function block parameters:** Start speed reduction - SF2 limit: 5.0 to 90.0 °C (40.0 °C) Stop speed reduction - SF2 limit: 5.0 to 90.0 °C (50.0 °C) Minimum speed: 0 to 50 % (20 %)
22	SLP depending on return flow temperature	0	16.x	CO1 -> F22 - 1: Storage tank charging pump not ON unless return flow hot
23	Differential temperature control	0	System Anl 1.0, 16.0 only	CO1 -> F23 - 1: Activation of differential temperature control **Function block parameters:** Set point of differential temperature control: 0.0 to 50.0 °C (20.0 °C) KP (influence factor): 0.1 to 10.0 (1.0) Minimum speed: 0 to 100 % (20 %)

F Function block number, WE Default setting, Anl System code number

CO1': Rk1 · Heating circuit 1 (not system Anl 1.9) [1)]

F	Function	WE	Anl	Comments Function block parameters: value range (default setting)
00	Demand only	0	All [1)]	CO1' -> F00 - 1: Rk1 works as a feeder circuit. Rk1 only processes external demand for heating; UP1 runs depending on demand.
03	Discharging protection	0	16.x	CO1' -> F03 - 1: discharging protection active
04	Variable night set-back	0	1.5, 1.6, 3.x, 16.x	CO1' -> F04 - 1: variable night set-back (only when CO1 -> F11 - 0) **Function block parameters:** OTL night 100 %: –50 to +20.0 °C (+5.0 °C) OTL day 0 %: –50 to +5.0 °C (–15.0 °C)

F Function block number, WE Default setting, Anl System code number

CO2: Rk2 · Heating circuit 2 (systems Anl 3.x, 4.x, 10.0, 16.6) [1)]

F	Function	WE	Anl	Comments Function block parameters: value range (default setting)
01	Room sensor RF2	0	All [1)]	CO2 -> F01 - 1: Temperature reading and FG2 input for Type 5244 and 5257-5 or Type 5257-51 Room Panels active
02	Outdoor sensor	1	All [1)]	CO2 -> F02 - 1: with outdoor sensor AF1, outdoor-temperature-compensated control active
03	Return flow sensor RüF2	1	10.x	CO2 -> F03 - 1: Sensor and limitation function active **Function block parameters:** KP (limiting factor): 0.1 to 10.0 (1.0)
		0	3.0, 4.x, 16.6	
04	Cooling control	0	All [1)]	CO2 -> F04 - 1: Cooling control, only when CO2 -> F11 - 1 The cooling control function causes a reversal of the operating direction and a minimum limitation of the return flow temperature in RK2.
05	Underfloor heating Drying of jointless floors	0	All [1)]	CO2 -> F05 - 1: Restriction of the adjustment ranges **Function block parameters:** Boost: 0.0 to 50.0 °C (0.0 °C) Start temperature: 20.0 to 60.0 °C (25 °C) Hold (days): 0 to 10 days (0) Temp. rise/day: 0.0 to 10.0 °C (5.0 °C) Maximum temperature: 25.0 to 60.0 °C (45.0 °C) Hold (days): 0 to 10 days (4) Temp. reduction/day: 0.0 to 10.0 °C (0.0 °C) SToP, ▪STArT, ▪▪STArT, ▪▪▪STArT, ▪▪▪▪STArT

F	Function	WE	Anl	Comments Function block parameters: value range (default setting)
07	Optimization	0	All [1]	CO2 -> F07 - 1: only when CO2 -> F01 - 1 and CO1 -> F02 - 1
08	Adaptation	0	All [1]	CO2 -> F08 - 1: only when CO2 -> F01 - 1, CO1 -> F02 - 1 and CO2 -> F11 - 0
09	Flash adaptation	0	All [1]	CO2 -> F09 - 1: only when CO2 -> F01 - 1 **Function block parameters:** Cycle time: 0 or 1 to 100 min (20 min) KP (gain): 0.0 to 25.0 (0.0)
11	Four-point characteristic	0	All [1]	CO2 -> F11 - 1: Four-point characteristic (only when CO2 -> F08 - 0) CO2 -> F11 - 0: Gradient characteristic
12	Control mode	1	All [1]	CO2 -> F12 - 1: Three-step control **Function block parameters:** KP (gain): 0.1 to 50.0 (2.0) Tn (reset time): 1 to 999 s (120 s) TV (derivative-action time): 0 s, do not change the value. TY (valve transit time): 15, …, 240 s (35 s) CO2 -> F12 - 0: On/off control **Function block parameters:** Hysteresis: 1.0 to 30.0 °C (5.0 °C) Min. ON time: 0 to 10 min (2 min) Min. OFF time: 0 to 10 min (2 min)
13	Limitation of set point deviation for OPEN signal	0	All [1]	CO2 -> F13 - 1: only when CO2 -> F12 - 1 **Function block parameters:** Max. system deviation: 3.0 to 10.0 °C (3.0 °C)
14	Release Rk2 at input BI2	0	All [1]	With CO2 -> F14 - 1 setting: FG2 has no function **Selection:** BI = 1, BI = 0 (BI = 1)
16	Demand processing 0 to 10 V Input terminals 11/12	0	All [1]	CO2 -> F16 - 1: Demand processing in Rk2 The standardized signal output (terminals 11/12) is not available anymore as a control output.

F Function block number, WE Default setting, Anl System code number

CO2: Rk2 · Heating circuit 2 (systems Anl 3.x, 4.x, 10.0, 16.6) [1)]

F	Function	WE	Anl	Comments Function block parameters: value range (default setting)
00	Demand only	0	All [1)]	CO2' -> F00 - 1: Rk2 works as a feeder circuit. Rk2 only processes external demand for heating; UP1 runs depending on demand.
04	Variable night set-back	0	Not Anl 3.5	CO2' -> F04 - 1: Variable night set-back (only when CO2 -> F11 - 0) **Function block parameters:** OTL night 100 %: –50 to +20.0 °C (+5.0 °C) OTL day 0 %: –50 to +5.0 °C (–15.0 °C)

F Function block number, WE Default setting, Anl System code number

CO4: DHW heating (systems Anl 1.1–1.3, 1.5, 1.6, 1.9, 2.x, 4.1, 4.5, 11.x) [1)]

F	Function	WE	Anl	Comments Function block parameters: value range (default setting)
01	Storage tank sensor SF1	1	1.1–1.3, 1.5, 1.6, 2.x, 4.1, 4.5, 11.0, 11.2	CO4 -> F01 - 0 (not system Anl 11.0): storage tank thermostat, only when CO4 -> F02 - 0
		0	1.9, 11.9	
02	Storage tank sensor SF2 with stop storage tank charging function (not assigned to the solar circuit)	0	1.1, 1.3, 1.5, 2.0, 2.1, 2.3, 4.1, 4.5, 11.0, 11.1, 11.5	CO4 -> F02 - 1 (not Anl 1.3, 1.9, 2.3, 11.0 <nd 11.9): only when CO4 -> F01 - 1
		1	1.2, 1.6, 2.2, 11.2	
03	Return flow sensor RüF2	0	1.9, 11.x	CO4 -> F03 - 1: Sensor and limitation function active **Function block parameter:** KP (limiting factor): 0.1 to 10.0 (1.0)
05	Flow sensor VF4	0	1.1, 1.2, 1.6, 2.2	CO4 -> F05 - 1: Flow sensor to measure storage tank charging temperature active

F	Function	WE	Anl	Comments Function block parameters: value range (default setting)
06	Parallel pump operation	0	2.1–2.3, 4.1, 4.5	CO4 -> F06 - 1 **Function block parameters:** Stop parallel pump operation in the event of a system deviation: 0 to 10 min (10 min) Flow temperature limit for parallel operation: 20.0 to 90.0 °C (40.0 °C) CO4: F06 - 0: UP1 switched off during DHW heating
07	Intermediate heating	1	2.x, 4.1, 4.5	CO4 -> F07 - 1: after 20 minutes of DHW heating, heating operation in UP1 circuit reactivated for 10 minutes CO4 -> F07 - 0: storage tank charging is given unlimited priority concerning UP1 circuit
08	Priority through reverse control	0	1.1–1.3, 4.1, 4.5, 11.x	CO4 -> F08 - 1: only when CO4 -> F09 - 0 **Function block parameters:** Start: 0 to 10 min (2 min) KP (influence factor): 0.1 to 10.0 (1.0) System Anl 4.5 only: control circuit HC1, HC2, HC1+HC2 (HC2)
09	Priority through set-back operation	0	1.1–1.3, 4.1, 4.5, 11.x	CO4 -> F09 - 1: only when CO4 -> F08 - 0 **Function block parameters:** Start: 0 to 10 min (2 min) System Anl 4.5 only: HC1, HC2, HC1+HC2 (HC2)
10	Circulation pump (DHW) integrated into the heat exchanger	0	1.6, 11.2	CO4 -> F10 - 1: Control of DHW circuit active while circulation pump (ZP) is running
		1	11.6	
11	Circulation pump operation during storage tank charging	0	1.1–1.3, 1.5, 1.6, 2.x, 4.1, 4.5, 11.1, 11.2	CO4 -> F11 - 1: Circulation pump (ZP) runs according to time schedule during storage tank charging CO4 -> F11 - 0: Circulation pump (ZP) switched off during storage tank charging

F	Function	WE	Anl	Comments Function block parameters: value range (default setting)
12	Control mode	1	1.9, 11.x	CO4 -> F12 - 1: Three-step control **Function block parameters:** KP (gain): 0.1 to 50.0 (2.0; system Anl x.9: 0.6) Tn (reset time): 1 to 999 s (120 s; system Anl x.9: 12 s) TV (derivative-action time): 0 s, do not change the value. TY (valve transit time): 15, …, 240 s (35 s; system Anl x9: 20 s) CO4 -> F12 - 0 (systems Anl 11.0, 11.1 only): on/off control **Function block parameters:** Hysteresis: 1.0 to 30.0 °C (5.0 °C) Min. ON time: 0 to 10 min (2 min) Min. OFF time: 0 to 10 min (2 min)
13	Limitation of set point deviation for OPEN signal	0	1.9, 11.x	CO4 -> F13 - 1: only when CO4 -> F12 - 1 **Function block parameters:** Max. system deviation: 3.0 to 10.0 °C (3.0 °C)
14	Thermal disinfection	0	All [1)]	CO4 -> F14 - 1: only when CO4 -> F01 - 1 **Function block parameters:** Day of the week: 1, 2, ..., 7, 1-7 (3) Start time: 00:00 to 23:45 (00:00) Stop time: 00:00 to 23:45 (04:00) Disinfection temperature: 60.0 to 90.0 °C (70.0 °C) Set point boost: 0 to 50 °C (10 °C) Disinfection temperature sustaining time: 0 to 255 min (0 min) When the start time is set to the same time as the stop time **Selection:** BI = 1, BI = 0 (BI = 1), input terminals 03/12 (only possible without SF2/RF2)
15	SLP ON depending on return flow temperature	0	1.5, 1.6, 2.0, 2.1, 2.3, 4.1, 11.1, 11.2	For systems Anl 1.5, 1.6, 2.0, 2.1, 2.3, 4.1: CO4 -> F15 - 1: only when CO1 -> F03 - 1 For systems Anl 11.1 and 11.2: CO4 -> F15 - 1: only when CO4 -> F03 - 1
16	Priority for external demand	0	1.5, 1.6, 2.x, 4.1	When CO4 -> F16 - 1 is configured, a high external demand causes correspondingly excessive charging temperatures in DHW circuits without control valve.
19	Time-controlled changeover of storage tank sensors	0	1.1–1.3, 1.5, 1.6, 2.x, 4.1, 4.5, 11.1, 11.2	CO4 -> F19 - 1: only when CO4 -> F02 - 1 SF1 applies for day mode and SF2 for night mode.

F	Function	WE	Anl	Comments Function block parameters: value range (default setting)
20	DHW circuit additionally controlled by a globe valve	0	11.1	CO4 -> F20 - 1: Return flow temperature limitation using the globe valve with VF2 in the heating register return flow of the storage tank
21	Speed control of the charging pump	0	1.1–1.3, 1.5, 1.6, 2.x, 4.1, 11.1, 11.2	CO4 -> F21 - 1: Temperature-based adaptation of the delivery rate of the charging pump **Function block parameters:** Start speed reduction - SF2 limit: 5.0 to 90 °C (40.0 °C) Stop speed reduction - SF2 limit: 5.0 to 90 °C (50.0 °C) Minimum speed: 0 to 50 % (20 %)
22	Cold charging protection	0	1.1	CO4 -> F22 - 1: Storage tank charging started when the primary flow temperature is high enough **Function block parameters:** Valve position: 1 to 100 %

F Function block number, WE Default setting, Anl System code number

CO4': DHW heating (systems Anl 1.1–1.3, 1.5, 1.6, 1.9, 2.x, 4.1, 4.5, 11.x)

F	Function	WE	Anl	Comments Function block parameters: value range (default setting)
03	Discharging protection	0	Not systems Anl 1.1-1.3, 1.9, 11.0, 11.9	CO4' -> F03 - 1: discharging protection active

F Function block number, WE Default setting, Anl System code number

CO5: System-wide functions (all systems)

If the controller indicates CO5 -> F00 - 1, any access to the return flow, flow rate and capacity settings is locked.

F	Function	WE	Anl	Comments Function block parameters: value range (default setting)
01 02 03	Sensor initialization	1	All	CO5 -> F01 - 1, F02 - 0: Pt 1000 CO5 -> F01 - 0, F02 - 0: PTC CO5 -> F01 - 1, F02 - 1: Ni 1000
04	Summer mode	0	Not systems Anl 1.5, 1.6, 1.9, 3.5	CO5 -> F04 - 1: Activation of time-dependent summer mode **Function block parameters:** Start date for summer mode: 01.01 to 31.12 (01.06) No. days until activation: 1 to 3 (2) End date for summer mode: 01.01 to 31.12 (30.09) No. days until deactivation: 1 to 3 (1) Outdoor temperature limit for summer mode: 0.0 to 30.0 °C (18.0 °C)
05	Delayed outdoor temperature adaptation as the temperature falls	0	Not Anl 1.9	CO5 -> F05 - 1 **Function block parameters:** Delay/h: 0.2 to 6.0 °C (3.0 °C)
06	Delayed outdoor temperature adaptation as the temperature rises	0	Not Anl 1.9	CO5 -> F06 - 1 **Function block parameters:** Delay/h: 0.2 to 6.0 °C (3.0 °C)
08	Summer/ standard time switchover	0	All	
09	Frost protection program II	1	Not systems Anl 1.5, 1.6, 1.9, 3.5	CO5 -> F09 - 0: Frost protection program I (restricted frost protection) **Function block parameters:** Frost protection limit: –15.0 to +3.0 °C (3.0 °C)
		0	1.5, 1.6, 1.9, 3.5	CO5 -> F09 - 1: Frost protection program II **Function block parameters:** Frost protection limit: –15.0 to +3.0 °C (3.0 °C)

F	Function	WE	Anl	Comments Function block parameters: value range (default setting)
12	Creep feed rate limitation	0	Not Anl 1.9	CO5 -> F12 - 1: Creep feed rate limitation **Selection:** bin (input terminals 04/12), AnA (input RüF1) **Function block parameters when 'bin' is selected:** BI = 1, BI = 0 (BI = 1)
14	Operation UP1	0	3.0, 16.x	CO5 -> F14 - 1: feeder pump UP1 also starts to operate to cover the demand of Rk2.
15	Release controller at input BI1	0	All	With CO5 -> F15 - 1 setting: FG1 has no function **Selection:** BI = 1, BI = 0 (BI = 1)
16	Return flow temperature limitation with P algorithm	0	All	CO5 -> F16 - 1: Return flow temperature limitation only with proportional component
19	Temperature monitoring	0	All	CO5 -> F19 - 1: Temperature monitoring active
20	Sensor calibration	1	All	CO5 -> F20 - 1: Set all sensor calibration values CO5 -> F20 - 0: Delete all sensor calibration values
21	Lock manual level	0	All	CO5 -> F21 - 1: Controller runs in automatic mode in ⍒ switch position.
22	Lock the rotary switch	0	All	CO5 -> F22 - 1: Rotary switch without any function. It is still possible to enter the key number.
23	Outdoor temperature as 0 to 10 V signal	0	All	CO5 -> F23 - 1: Outdoor temperature received (AE) or sent (AA) as 0 to 10 V signal (terminals 11/12) **Function block parameters:** Direction: AE, AA (AE) Lower transmission range: –50.0 to +100.0 °C (–20.0 °C) Upper transmission range: –50.0 to +100.0 °C (50.0 °C)

F Function block number, WE Default setting, Anl System code number

CO5': System-wide functions (all systems)

F	Function	WE	Anl	Comments Function block parameters: value range (default setting)
01	AA reverse Output terminals 11/12	0	All	CO5' -> F01 - 0: 0 V/0 % = Valve CLOSED/pump OFF CO5' -> F01 - 1: 0 V/0 % = Valve OPEN/pump with max. delivery rate **Function block parameters:** Zero: 0 to 50 % (0 %)
07	AE zero Input terminals 11/12	0	All	CO5' -> F07 - 1 **Function block parameters:** Zero: 5 to 20 % (5 %) Lower transmission range: 0 to 150 °C (0 °C) Upper transmission range: 0 to 150 °C (120 °C)
10	AA PWM Output terminals 11/12	0	All	CO5' -> F10 - 0/-1 (hardware of TROVIS 5573 cannot process a PWM signal at the 0 to 10 V output) **Function block parameters:** 0 = 0 to 10 V input 1 = Control signal RK1 (default) 2 = Control signal RK2 5 = Outdoor temperature 6 = External demand 7 = SLP speed 9 = Differential temperature control 10 = 10 V supply 14 = 3 V supply

F Function block number, WE Default setting, Anl System code number

CO6: Modbus (all systems)

F	Function	WE	Anl	Comments Function block parameters: value range (default setting)
01	Modbus	1	All	CO6 -> F01 - 1: Modbus active
02	16-bit address	0	All	CO6 > F02 - 1: 16-bit addressing (only when CO6 > F01 - 1) CO6 -> F02 - 0: 8-bit addressing

F	Function	WE	Anl	Comments Function block parameters: value range (default setting)
03	Modem function	0	All	CO6 -> F03...F06 is required to configure the error message transfer to a connected Modbus/GPRS gateway (1402-0701).
04	Automatic modem configuration	0	All	
05	Lock dial-up to building automation system	0	All	
06	Dial-up to building automation system also to indicate that an error has been remedied	0	All	
07	Monitoring	0	All	CO6 -> F07 - 1: Reset all even bits to 'autonomous' when there is no communication (only when CO6 -> F01 - 1)
08	Text message	0	All	CO6 -> F08 is required to configure the error message transfer to a connected Modbus/GPRS gateway (1402-0701).
20	Modbus without building automation system	0	All	CO6 -> F20 - 1: Various Modbus specifications do not have any effect on the collective level/building automation system reading

F Function block number, WE Default setting, Anl System code number

CO8: Initialization of BI1 and BI2 (all systems)

F	Function	WE	Anl	Comments Function block parameters: value range (default setting)
01	Analysis of BI1	0	All	CO8 -> F01 - 1: Analysis active **Function block parameters:** Error message when BI = 0, BI = 1, none (1)
02	Analysis of BI2	0	All	CO8 -> F02 - 1: Analysis active **Function block parameters:** Error message when BI = 0, BI = 1, none (1)

16.7 Parameter lists

PA1: PA1 parameters (heating circuit 1)

PA2: PA2 parameters (heating circuit 2)

Pictogram	Parameter name Value range (default setting)
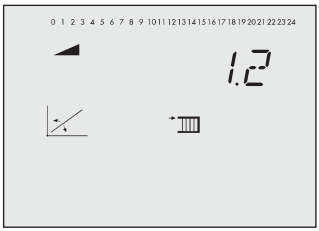	Flow gradient 0.2 to 3.2 (1.2) (when CO1, 2 -> F05 - 1, 0.2 to 1.0 (0.5) applies)
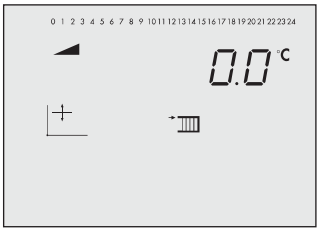	Level (parallel shift) –30.0 to +30.0 °C (0.0 °C)
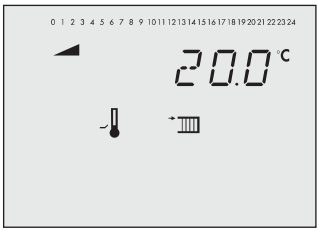	Min. flow temperature –5.0 to +150.0 °C (20.0 °C)
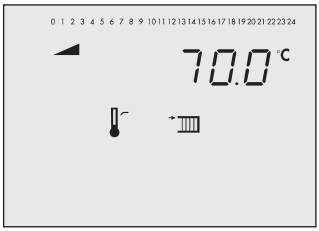	Max. flow temperature 5.0 to 150.0 °C (70.0 °C) When CO1, 2 -> F05 - 1: 5.0 to 50.0 °C (50.0 °C)

Pictogram	**Parameter name** Value range (default setting)
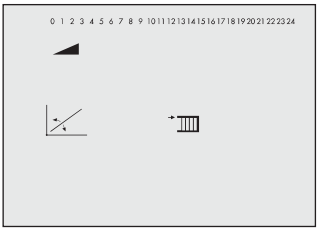	Four-point characteristic Press rotary pushbutton [✳] to set the following parameters: Outdoor temperature Flow temperature Reduced flow temperature Return flow temperature
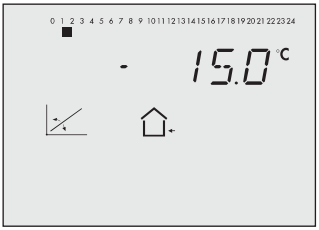	Four-point characteristic Point 1: outdoor temperature Outdoor temperatures of points 2, 3 and 4 are marked by squares under the numbers 2, 3 and 4. –50.0 to +50.0 °C (pt. 1: –15.0 °C, pt. 2: –5.0 °C, pt. 3: 5.0 °C, pt. 4: 15.0 °C) When CO1, 2 -> F04 - 1 (pt. 1: 5.0 °C, pt. 2: 15.0 °C, pt. 3: 25.0 °C, pt. 4: 30.0 °C)
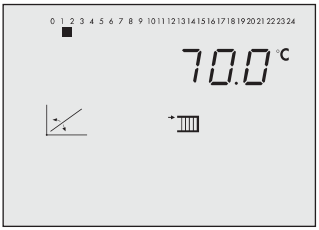	Four-point characteristic Point 1: flow temperature Flow temperatures of points 2, 3 and 4 are marked by squares under the numbers 2, 3 and 4. –5.0 to +150.0 °C (pt. 1: 70.0 °C, pt. 2: 55.0 °C, pt. 3: 40.0 °C, pt. 4: 25.0 °C) When CO1, 2 -> F04 - 1: (pt. 1: 20.0 °C, pt. 2: 15.0 °C, pt. 3: 10.0 °C, pt. 4: 5.0 °C)
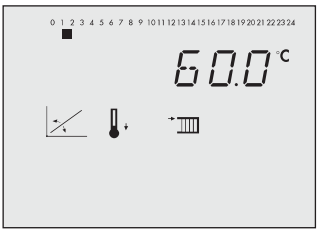	Four-point characteristic Point 1: reduced flow temperature Reduced flow temperatures of points 2, 3 and 4 are marked by squares under the numbers 2, 3 and 4. –5.0 to +150.0 °C (pt. 1: 60.0 °C, pt. 2: 40.0 °C, pt. 3: 20.0 °C, pt. 4: 20.0 °C) When CO1, 2 -> F04 - 1: (pt. 1: 30.0 °C, pt. 2: 25.0 °C, pt. 3: 20.0 °C, pt. 4: 15.0 °C)

Pictogram	**Parameter name** Value range (default setting)
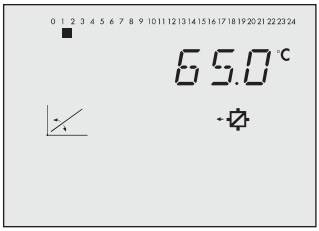	Four-point characteristic Point 1: return flow temperature Return flow temperatures of points 2, 3 and 4 are marked by squares under the numbers 2, 3 and 4. 5.0 to 90.0 °C (points 1 to 4: 65.0 °C)
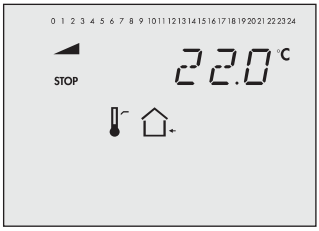	OT deactivation value in rated operation 0.0 to 50.0 °C (22.0 °C)
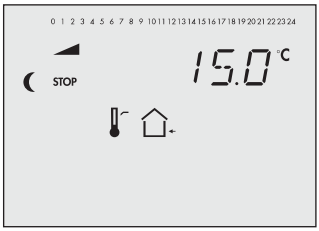	OT deactivation value in reduced operation –50.0 to +50.0 °C (15.0 °C)
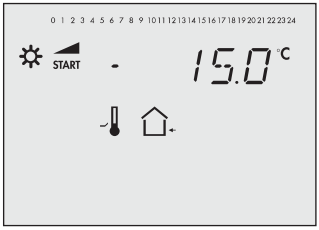	OT activation value in rated operation –50.0 to +5.0 °C (–15.0 °C)

Pictogram	Parameter name Value range (default setting)
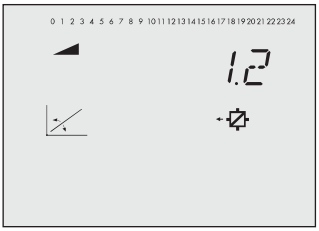	Return flow gradient 0.2 to 3.2 (1.2)
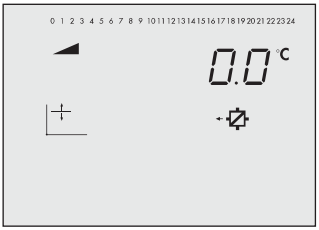	Return flow level –30.0 to +30.0 °C (0.0 °C)
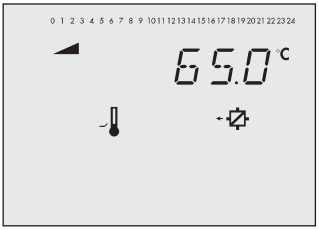	Base point for return flow temperature: 5.0 to 90.0 °C (65.0 °C)
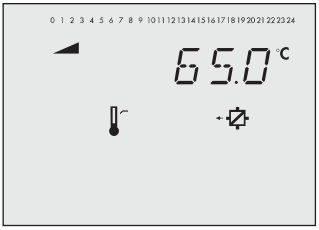	Max. return flow temperature 5.0 to 90.0 °C (65.0 °C)

Pictogram	**Parameter name** Value range (default setting)
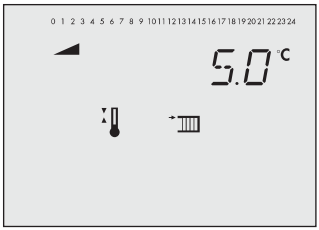	Set point boost (primary exchanger control) 0.0 to 50.0 °C (5.0 °C)
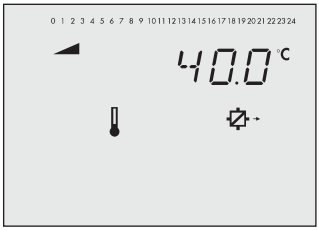	Set point for binary demand processing 0.0 to 150.0 °C (40.0 °C) Only in PA1 parameter level
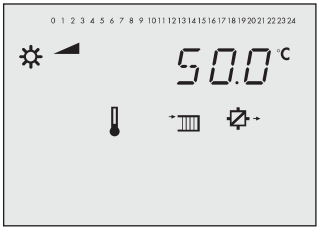	Flow set point, day –5.0 to +150.0 °C (50.0 °C) Only with flash adaptation without outdoor sensor
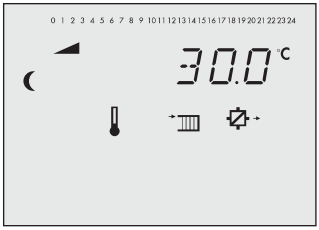	Flow set point, night –5.0 to +150.0 °C (30.0 °C) Only with flash adaptation without outdoor sensor

Pictogram	**Parameter name** Value range (default setting)
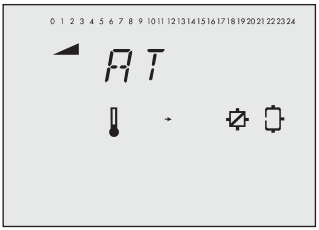	Minimum set point to charge buffer tank OT to 90.0 °C (AT) In PA1 only
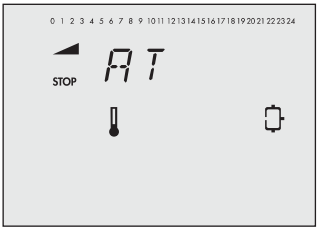	Stop charging of the buffer tank OT to 90.0 °C (AT) In PA1 only
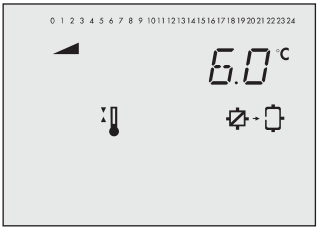	Charging temperature boost 0.0 to 50.0 °C (6.0 °C) In PA1 only
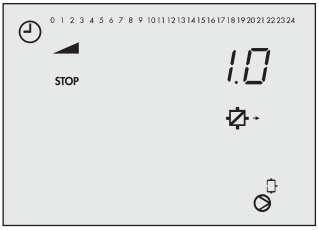	Lag time of charging pump 0.0 to 10.0 (1.0) In PA1 only

PA4: DHW circuit parameters

Pictogram	Parameter name Value range (default setting)
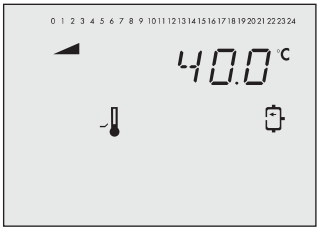	Min. DHW temperature 5.0 to 90.0 °C (40.0 °C)
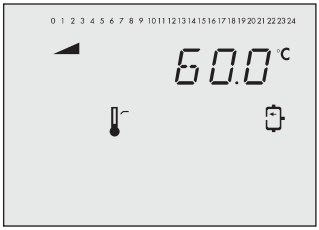	Max. DHW temperature 5.0 to 90.0 °C (60.0 °C)
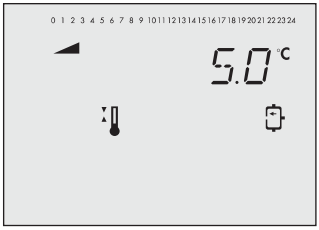	Hysteresis 1.0 to 30.0 °C (5.0 °C)
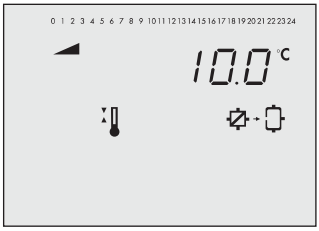	Charging temperature boost 0.0 to 50.0 °C (10.0 °C)

Pictogram	Parameter name Value range (default setting)
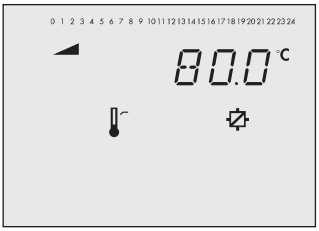	Max. charging temperature (only with VF4) 20.0 to 150.0 °C (80.0 °C)
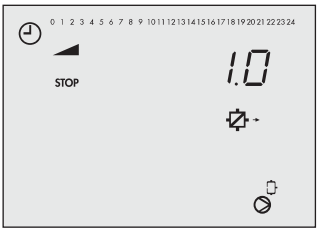	Lag time for storage tank charging pump 0.0 to 10.0 (1.0)
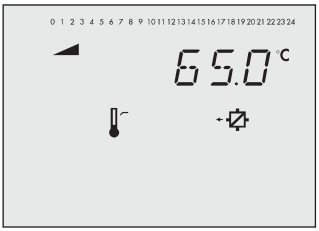	Max. return flow temperature 20.0 to 90.0 °C (65.0 °C)
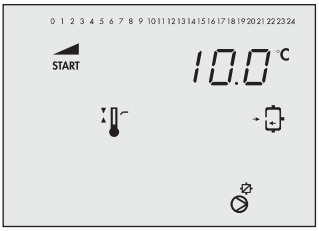	Solar circuit pump ON 1.0 to 30.0 °C (10.0 °C)

Pictogram	Parameter name Value range (default setting)
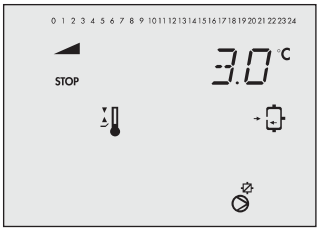	Solar circuit pump OFF 0.0 to 30.0 °C (3.0 °C)
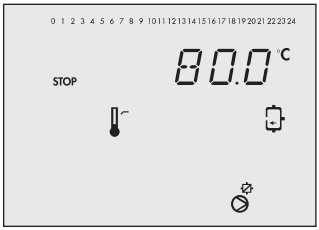	Max. storage tank temperature 20.0 to 90.0 °C (80.0 °C)
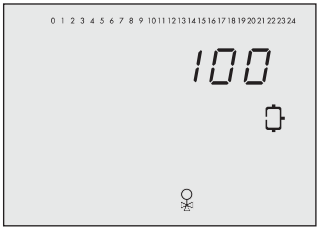	Control signal DHW for storage tank charging 5 to 100 % (100 %)

PA5: System-wide parameters (all systems)

Pictogram	Parameter name Value range (default setting)
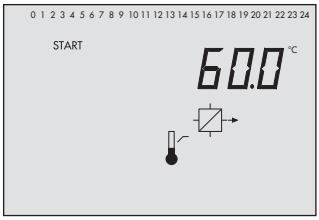	Boiler pump ON 20 to 90 °C (60 °C) System Anl 16.x only

Pictogram	Parameter name Value range (default setting)
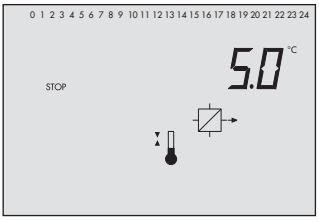	Hysteresis 0 to 30 °C (5 °C) System Anl 16.x only
	Public holidays 01.01 to 31.12 (see the 'Setup' chapter)
	Vacations 01.01 to 31.12 (see the 'Setup' chapter)

PA6: Modbus parameters

Pictogram	Parameter name Value range (default setting)
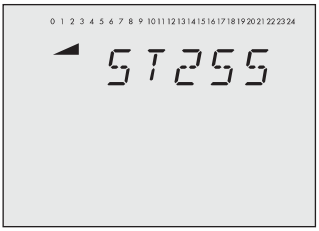	Station address 1 to 247 (255) (when CO6 -> F02 - 1: 1 to 32000 applies)

16.8 Customer-specific data

Station	
Operator	
SAMSON office	
System code number	

Function block settings in configuration levels

	CO1	CO1'	CO2	CO2'	CO4	CO4'	CO5	CO5`	CO6	CO8
F00										
F01										
F02										
F03										
F04										
F05										
F06										
F07										
F08										
F09										
F10										
F11										
F12										
F13										
F14										
F15										
F16										
F17										
F18										
F19										
F20										
F21										
F22										
F23										

Heating circuit 1 and Rk2 (heating circuit 2)

Levels 1 and 2 parameters	PA1	PA2	Value range
Flow gradient			0.2 to 3.2
Flow level			–30.0 to +30.0 °C
Min. flow temperature			–5.0 to +150.0 °C
Max. flow temperature			5.0 to 150.0 °C
Four-point characteristic			
Outdoor temperature, point 1			–50.0 to +50.0 °C
Outdoor temperature, point 2			–50.0 to +50.0 °C
Outdoor temperature, point 3			–50.0 to +50.0 °C
Outdoor temperature, point 4			–50.0 to +50.0 °C
Flow temperature, point 1			–5.0 to +150.0 °C
Flow temperature, point 2			–5.0 to +150.0 °C
Flow temperature, point 3			–5.0 to +150.0 °C
Flow temperature, point 4			–5.0 to +150.0 °C
Reduced flow temperature, point 1			–5.0 to +150.0 °C
Reduced flow temperature, point 2			–5.0 to +150.0 °C
Reduced flow temperature, point 3			–5.0 to +150.0 °C
Reduced flow temperature, point 4			–5.0 to +150.0 °C
Return flow temperature, point 1			5.0 to 90.0 °C
Return flow temperature, point 2			5.0 to 90.0 °C
Return flow temperature, point 3			5.0 to 90.0 °C
Return flow temperature, point 4			5.0 to 90.0 °C
OT deactivation value in rated operation			0.0 to 50.0 °C
OT deactivation value in reduced operation			–50.0 to +50.0 °C
OT activation value in rated operation			–50.0 to +5.0 °C
Return flow gradient			0.2 to 3.2
Return flow level			–30 to +30.0 °C
Base point for return flow temperature:			5.0 to 90.0 °C
Flow set point, day			–5.0 to +150 °C
Flow set point, night			–5.0 to +150 °C
Minimum set point to charge buffer tank			OT to 90.0 °C
Stop charging of the buffer tank			OT to 90.0 °C
Charging temperature boost			0.0 to 50.0 °C
Lag time for storage tank charging pump			0.0 to 10.0
Set point boost (primary exchanger control)			0.0 to 50.0 °C
Set point for binary demand processing			0.0 to 150 °C

F	Function block parameters	CO1	CO1'	CO2	CO2'	Value range
03 - 1	KP (limiting factor)		–			0.1 to 10.0
04 -1	Variable night set-back, OTL night	–		–		–50 to +20 °C
04 -1	Variable night set-back, OTL day	–		–		–50 to +5 °C
05 - 1	Boost		–		–	0.0 to 50.0 °C
05 - 1	Start temperature		–		–	20.0 to 60.0 °C
05 - 1	Hold (days)		–		–	0 to 10 days
05 - 1	Temp. rise/day		–		–	0.0 to 10.0 °C
05 - 1	Maximum temperature		–		–	25.0 to 60.0 °C
05 - 1	Hold (days)		–		–	0 to 10 days
05 - 1	Temp. reduction/day		–		–	0.0 to 10.0 °C
09 - 1	Cycle time		–		–	0/1 to 100 min
09 - 1	KP (gain)		–		–	0.0 to 25.0
12 - 1	KP (gain)		–		–	0.1 to 50.0
12 - 1	Tn (reset time)		–		–	1 to 999 s
12 - 1	TV (derivative-action time)		–		–	0 to 999 s
12 - 1	TY (valve transit time)		–		–	15 to 240 s
12 - 0	Hysteresis		–		–	1.0 to 30.0 °C
12 - 0	Min. ON time		–		–	0 to 10 min
12 - 0	Min. OFF time		–		–	0 to 10 min
13 - 1	Max. system deviation		–		–	3.0 to 10.0 °C
14 - 1	Binary input		–		–	BI = 1, BI = 0
17 - 1	Binary input		–	–	–	BI = 1, BI = 0
18 - 1	Lower transmission range		–	–	–	0.0 to 150.0 °C
18 - 1	Upper transmission range		–	–	–	0.0 to 150.0 °C
18 - 1	Boost flow temperature demand		–	–	–	0.0 to 30.0 °C
21 - 1	Start speed reduction		–	–	–	5 to 90 °C
21 - 1	Stop speed reduction		–	–	–	5 to 90 °C
21 - 1	Min. speed signal		–	–	–	0 to 10 V
23 - 1	Set point of differential temperature control		–	–	–	0.0 to 50.0 °C
23 - 1	KP (influence factor)		–	–	–	0.1 to 10
23 - 1	Minimum speed		–	–	–	0 to 100 %

DHW circuit

Level 4 parameters	PA4	Value range
Min. DHW temperature		5.0 to 90.0 °C
Max. DHW temperature		5.0 to 90.0 °C
Hysteresis		1.0 to 30.0 °C
Charging temperature boost		0.0 to 50.0 °C
Max. charging temperature		20.0 to 150.0 °C
Lag time for storage tank charging pump		0.0 to 10.0
Max. return flow temperature		0.0 to 90.0 °C
Solar circuit pump ON		1.0 to 30.0 °C
Solar circuit pump OFF		0.0 to 30.0 °C
Max. storage tank temperature		20.0 to 90.0 °C
Control signal DHW for storage tank charging		5 to 100 %

F	Function block parameters	CO4	Value range
03 - 1	KP (limiting factor)		0.1 to 10.0
06 - 1	Stop parallel pump operation in the event of a system deviation		0 to 10 min
06 - 1	Flow temperature limit for parallel operation		20.0 to 90.0 °C
08 - 1	Activate priority in the event of a system deviation		0 to 10 min
08 - 1	KP (influence factor)		0.1 to 10.0
09 - 1	Activate priority in the event of a system deviation		0 to 10 min
12 - 1	KP (gain)		0.1 to 50.0
12 - 1	Tn (reset time)		1 to 999 s
12 - 1	TV (derivative-action time)		0 s, do not change the value.
12 - 1	TY (valve transit time)		15 to 240 s
12 - 0	Hysteresis		1.0 to 30.0 °C
12 - 0	Min. ON time		0 to 10 min
12 - 0	Min. OFF time		0 to 10 min
13 - 1	Max. system deviation		3.0 to 10.0 °C
14 - 1	Day of the week		1-7, 1 to 7
14 - 1	Start time		00:00h to 23:45h
14 - 1	Stop time		00:00h to 23:45h

F	Function block parameters	CO4	Value range
14 - 1	Disinfection set point		60.0 to 90.0 °C
14 - 1	Set point boost		0.0 to 50.0 °C
14 - 1	Disinfection temperature sustaining time		0 to 255 min
21 - 1	Start speed reduction		5 to 90 °C
21 - 1	Stop speed reduction		5 to 90 °C
21 - 1	Min. signal		0 to 50 %0 to 50 %
22 - 1	Valve position when cold charging protection is active		1 to 100 %

Level 5 parameters	PA5	Value range
Boiler pump ON		20 to 90 °C
Hysteresis		0 to 30 °C
Public holidays		01.01 to 31.12
Vacation periods, Start		01.01 to 31.12
Vacation periods, Stop		01.01 to 31.12
Control circuit assignment		**1, 2, 3**
Vacation periods, Start		01.01 to 31.12
Vacation periods, Stop		01.01 to 31.12
Control circuit assignment		**1, 2, 3**

F	Function block parameters	CO5	Value range
04 - 1	Start date for summer mode		01.01 to 31.12
04 - 1	No. days until activation		1 to 3
04 - 1	End date for summer mode		01.01 to 31.12
04 - 1	No. days until deactivation		1 to 3
04 - 1	Outdoor temperature limit		0.0 to 30.0 °C
05 - 1 06 - 1	Delay per hour		1.0 to 6.0 °C
09 - 0 09 - 1	Frost protection limit		–15.0 to +3.0 °C
12 - 1	Input		bin, AnA
12 - 1, bin	Binary input		BI = 1, BI = 0
15 - 1	Binary input		BI = 1, BI = 0

F	Function block parameters	CO5	Value range
23 - 1	Direction		AE, AA
23 - 1	Lower transmission range		–50 to +100 °C
23 - 1	Upper transmission range		–50 to +100 °C

F	Function block parameters	CO5'	Value range
01 - 1	Zero point		0 to 50 %0 to 50 %
07 - 1	Zero point		5 to 20 %
07 - 1	Lower transmission range		0 to 150.0 °C
07 - 1	Upper transmission range		0 to 150.0 °C
10 - 0 /-1	Output		0 = 0 to 10 V input, 1 = Control signal RK1, 2 = Control signal RK2, 5 = Outdoor temperature, 6 = External demand, 7 = SLP speed, 9 = Differential temperature control, 10 = 10 V supply 14 = 3 V supply

Level 6 parameters	PA6	Value range
Station address (ST)		1 to 247 1 to 32000

F	Function block parameters	CO8	Value range
01 - 1	Error message when		BI = 0, BI = 1, none
10 - 1	Error message when		BI = 0, BI = 1, none

Settings at the rotary switch

Heating circuit 1 · Reading on display: **1**

Parameters			**Value range**
	Day set point		–5.0 to +150.0 °C
	Night set point		–5.0 to +150.0 °C

	Times-of-use	Mon	Tue	Wed	Thu	Fri	Sat	Sun
	Start first time-of-use							
	Stop first time-of-use							
	Start second time-of-use							
	Stop second time-of-use							
	Start third time-of-use							
	Stop third time-of-use							

Heating circuit 2 · Reading on display: **2**

Parameters			**Value range**
	Day set point		–5.0 to +150.0 °C
	Night set point		–5.0 to +150.0 °C

	Times-of-use	Mon	Tue	Wed	Thu	Fri	Sat	Sun
	Start first time-of-use							
	Stop first time-of-use							
	Start second time-of-use							
	Stop second time-of-use							
	Start third time-of-use							
	Stop third time-of-use							

DHW circuit · Reading on display: **3**

Parameters		**Value range**
DHW temperature set point		Min. to max. DHW temperature
DHW temperature sustaining value		

Times-of-use for DHW	Mon	Tue	Wed	Thu	Fri	Sat	Sun
Start first time-of-use							
Stop first time-of-use							
Start second time-of-use							
Stop second time-of-use							
Start third time-of-use							
Stop third time-of-use							

Times-of-use for DHW circulation pump	Mon	Tue	Wed	Thu	Fri	Sat	Sun
Start first time-of-use							
Stop first time-of-use							
Start second time-of-use							
Stop second time-of-use							
Start third time-of-use							
Stop third time-of-use							

16.9 Abbreviations

AF	Outdoor sensor
Anl	System
AT	Outdoor temperature
BA	Binary output
BE	Binary input
CO	Configuration level
CP	Solar circuit pump
EB	Mounting and operating instructions
F	Function block
GLT	Building control station
Kl	Terminal
KW	Cold water
PA	Parameter level
RF	Room sensor
RK	Control circuit
RüF	Return flow sensor
SF	Storage tank sensor
SLP	Storage tank charging pump
t	Time
T	Temperature
TLP	Heat exchanger charging pump
TWE	DHW heating
UP	Circulation pump (heating)
VF	Flow sensor
WE	Default setting
WW	Hot water
ZP	Circulation pump (DHW)

17 Appendix B

17.1 Accessories

Memory module	Order no. 1400-9379
Mini module	Order no. 1400-7436
Data logging module	Order no. 1400-9378
USB Converter 3	Order no. 1400-9377
TROVIS-VIEW software (free of charge)	▶ www.samsongroup.com > DOWNLOADS > Software & Drivers > TROVIS-VIEW
4-port bus hub	Order no. 1400-7140
RS-485 communication module	Order no. 8812-2002
Surge arrester SA5000	Order no. 1400-9868
SAM HOME Gateway	Type 5660
SAM MOBILE Gateway	Type 5655

17.2 After-sales service

After-sales service

Contact our after-sales service for support concerning service or repair work or when malfunctions or defects arise.

You can reach our after-sales service at aftersalesservice@samsongroup.com.

Addresses of SAMSON AG and its subsidiaries

The addresses of SAMSON AG, its subsidiaries, representatives and service facilities worldwide can be found on our website (www.samsongroup.com) or in all SAMSON product catalogs.

Required specifications

Please submit the following details:

- Model number
- Firmware version
- Serial number

Key number	**1732**

EB 5573 EN

SAMSON AKTIENGESELLSCHAFT
Weismüllerstraße 3 · 60314 Frankfurt am Main, Germany
Phone: +49 69 4009-0 · Fax: +49 69 4009-1507
samson@samsongroup.com · www.samsongroup.com

2024-12-04 · English